Power the future of Machine Vision

ODINVISION INC.
E-mail:info@odinvision.ca
www.odinvision.ca

ODINVISION INC.

MACHINE VISION LIGHTS PRODUCT MANUAL

COMPANY INTRODUCE

OdinVision is the world-class provider of vision systems, software and industrial solutions. We have been devoting ourselves to Machine Vision algorithm development for many years, and have extensive algorithm development experience and top-notch talents.

OdinVision SDK, designed mainly for seasoned developers, provides an extremely flexible use mode and supports various development languages to create powerful and comprehensive application software.

OdinVision Advanced Vision Builder (AVB) is a no-code development platform for rapid development of various Machine Vision applications. It provides unparalleled features for developers to fully implement complex logical flows and friendly user interfaces with the powerful computing and processing capabilities as well as the comprehensive algorithm toolkits proven in the long-term validation and verification.

Headquartered in Waterloo, Ontario, Canada, we have a professional machine vision laboratory and a sophisticated project evaluation team. We help companies improve product quality, eliminate production errors, reduce manufacturing costs, and exceed their customer's expectations for high-quality products at affordable prices and shorter time to market.

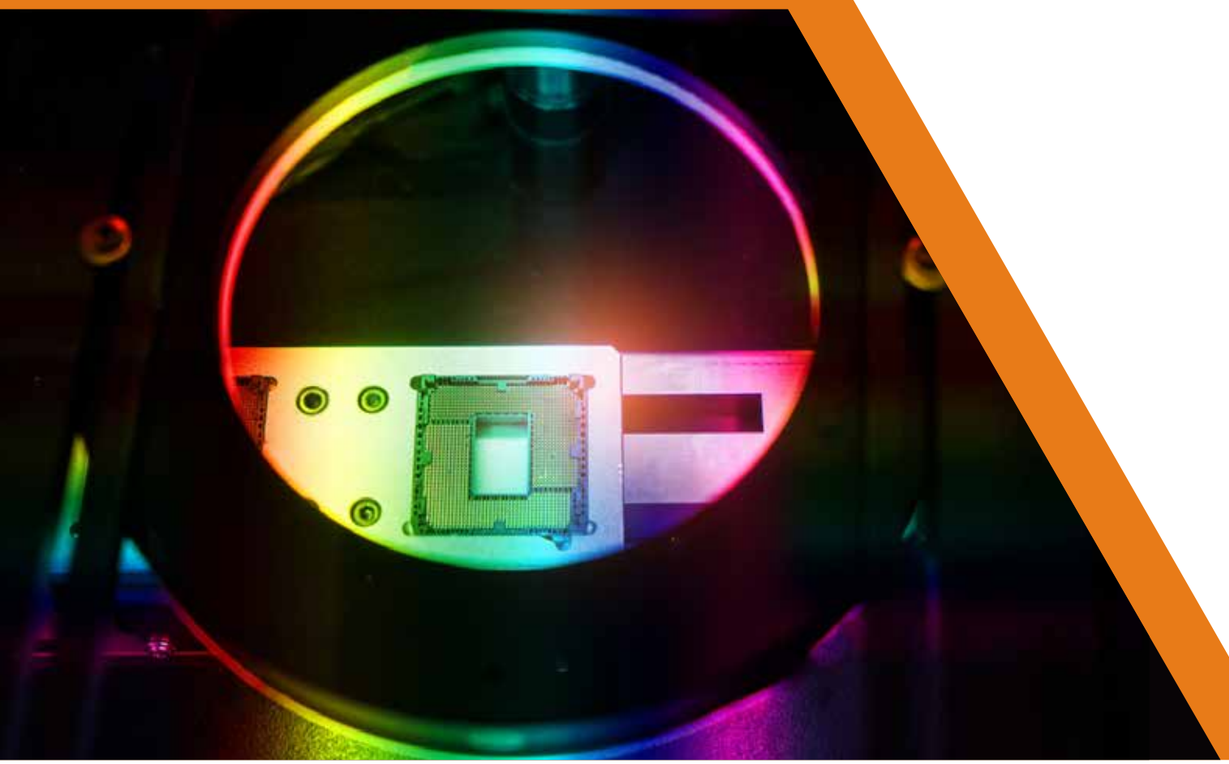

ODINVISION
MACHINE VISION LIGHTS

As customers demand more stringent Machine Vision performance, the requirements on the OdinVision Lights system continue to increase. OdinVision has launched a series of cost-effective Lights products to provide customers with more convenient and efficient professional Machine Vision Lights solutions. At the same time, we can customize products with special sizes and functions according to customer requirements.

Raw material advantage: each LED is strictly selected and quality tested.
Strong product lineup: dozens of series and hundreds of models for customers to choose from.
A number of free services: borrow and test for free, providing free light source solutions and testing lighting, free special customization pre-sales and after-sales services, cost-effective.

CATALOG

RL Series
Ring lights

Ring lights are usually emitted by LEDs or fluorescent lights. Generally, they come in three sizes: 12 inches, 14 inches, and 18 inches. You can place the camera in the center of the aperture, which is usually supported by a built-in lamp holder. This is one of the advantages of using a Ring light source because your camera is directly in the middle of the light. Thus, the subject of bright and shadowless light can be obtained.

Features

- High-density LED display, high brightness
- Compact design, saving installation space
- Optional diffuser plate to spread the light evenly
- Unique heat dissipation structure to improve light source stability
- 360-degree illumination of the ring lights, highlighting the three-dimensional information of the product
- Various angles, various diameters, various brightness options

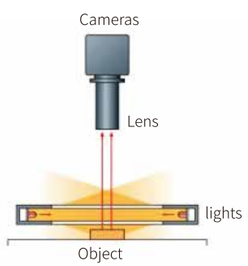

0°

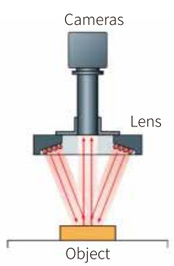

75°

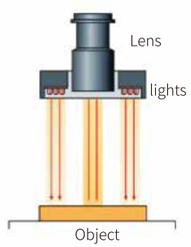

90°

Selection instructions

RL5000-R

- Lights color: R, G, B, W, etc.
- Luminous angle, light and horizontal angle, unit:degree
- Outer diameter, unit:mm
- Ring lights

Basic product features

Wavelength/ color temperature	Red	620-630nm	Green	520-530nm
	Blue	465-475nm	White	5000-7000k
Save environment	Temperature	-20-60˚C	Humidity	20-85%RH(non-condensing)
Use environment		-0-40˚C		
Optional accessories	Lights extension line 3/5 meters optional			
Adapter controller	HDT24-70W-4DT、HDT24-150W-4DT Digital light source controller			

Scope of Adaptation

- Various character recognition
- Various visual inspections
- Various defect detection
- Manipulator/MARK positioning
- Various damage and dirt detection
- QR code/DM code/QR code/barcode reading
- Dimensional measurement of various spare parts
- Different varieties mixed in detection by color recognition

Parameter table

No.	Model	Color	Power (W)		Number of lampbeads	Dimensions(mm)		
			R	G/B/W		Outer diameter	Inner diameter	Height
1	RL5000	●●●○	0.8	1.2	1	50	14	10
2	RL5015	●●●○	1.6	2.4	2	50	17	20
3	RL5030	●●●○	1.96	3.2	2	50	19.5	17.5
4	RL5045	●●●○	1.6	2.8	2	50	17.85	22
5	RL5060	●●●○	2	3.6	2	50	21.5	22
6	RL5075	●●●○	2	2.8	2	50	18	20
7	RL5090	●●●○	1.6	2.8	2	50	25	21.2
1	RL7000	●●●○	1.2	2	1	70	34	9
2	RL7015	●●●○	4	6.7	3	70	44	23.5
3	RL7030	●●●○	3.2	4.8	2	70	36	22
4	RL7045	●●●○	4.4	6.3	3	70	35	24
5	RL7060	●●●○	4.2	6	3	70	32.6	21.5
6	RL7075	●●●○	4.2	6	3	70	32	22.5
7	RL7090	●●●○	4.4	11	3	70	36	21.5

No.	Model	Color	Power (W)		Number of lampbeads	Dimensions(mm)		
			R	G/B/W		Outer diameter	Inner diameter	Height
1	RL9000	●●●○	2	2.8	1	90	54	10
2	RL9015	●●●○	5.9	8.3	3	90	49	24
3	RL9030	●●●○	6.3	9.5	3	90	50	23
4	RL9045	●●●○	7.1	12	4	90	46	23
5	RL9060	●●●○	7.1	12	4	90	42	24
6	RL9075	●●●○	6.3	11	4	90	44	24
7	RL9090	●●●○	5.5	7.9	3	90	50	20
1	RL10000	●●●○	2	2.8	1	100	60	10
2	RL10015	●●●○	4.4	6.3	2	100	70	18
3	RL10030	●●●○	6.7	11	3	100	62	24
4	RL10045	●●●○	8.3	12	4	100	50	25
5	RL10060	●●●○	8.3	12	4	100	50	23
6	RL10075	●●●○	5.1	7.5	3	100	50	20
7	RL10090	●●●○	8.3	14	5	100	40	20
1	RL12000	●●●○	2.8	4	1	120	86	9
2	RL12015	●●●○	9.1	15	4	120	82	26
3	RL12030	●●●○	8.3	14	3	120	80	25
4	RL12045	●●●○	17	28	7	120	60	35
5	RL12060	●●●○	15	24	6	120	54	32.5
6	RL12075	●●●○	11	15	4	120	72	18
7	RL12090	●●●○	8.7	13	3	120	76	20
1	RL15000	●●●○	7.9	11	1	150	106	9
2	RL15015	●●●○	11	16	3	150	109	24
3	RL15030	●●●○	14	20	4	150	102	29
4	RL15045	●●●○	14	20	4	150	101	25
5	RL15060	●●●○	11	16	3	150	110	23
6	RL15075	●●●○	9.8	15	3	150	100	22
7	RL15090	●●●○	23	34	10	150	40	20
1	RL18000	●●●○	4.4	6.3	1	180	140	9
2	RL18015	●●●○	13	19	3	180	139	24
3	RL18030	●●●○	24	26	5	180	132	29
4	RL18045	●●●○	17	24	4	180	130	26
5	RL18060	●●●○	18	26	4	180	126	23
6	RL18075	●●●○	17	24	4	180	130	20
7	RL18090	●●●○	16	23	4	180	130	22
1	RL20000	●●●○	5.1	7.1	1	200	160	9
2	RL20015	●●●○	19	28	4	200	155	30
3	RL20030	●●●○	26	34	5	200	142	33
4	RL20045	●●●○	15	22	3	200	155	25
5	RL20060	●●●○	19	27	4	200	150	24
6	RL20075	●●●○	19	27	4	200	150	20
7	RL20090	●●●○	44	61	12	200	70	22.5
1	RL24000	●●●○	5.9	8.7	1	240	204	11
2	RL24015	●●●○	24	34	4	240	195	30
3	RL24030	●●●○	24	34	4	240	196	29
4	RL24045	●●●○	24	34	4	240	192	28
5	RL24060	●●●○	24	33	4	240	190	24
6	RL24075	●●●○	24	33	4	240	190	20
7	RL24090	●●●○	51	85	11	240	123..5	23.2

Product Dimensions (mm)

RL5000

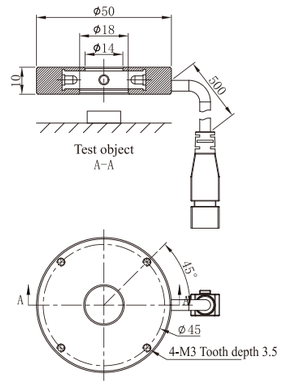

RL5015

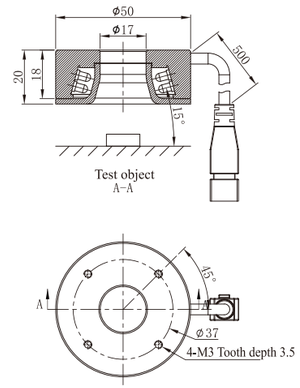

RL5030

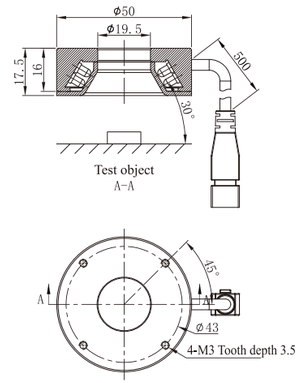

RL5045

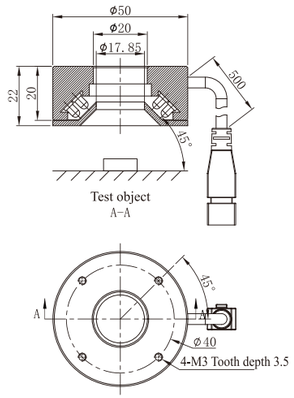

RL5060

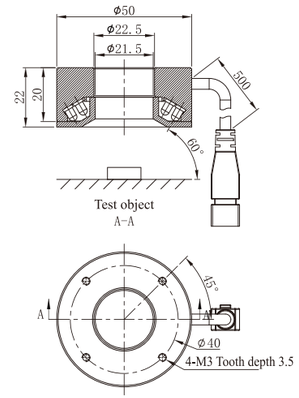

RL5075

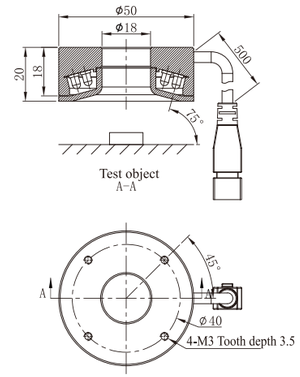

RL5090

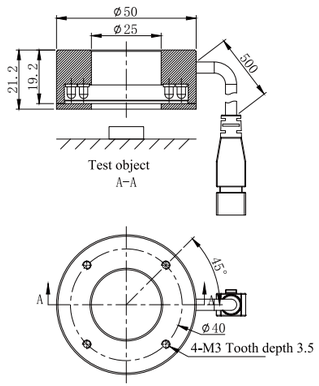

RL7000

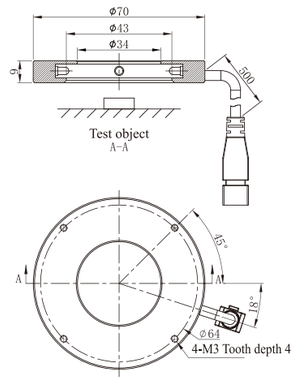

RL7015

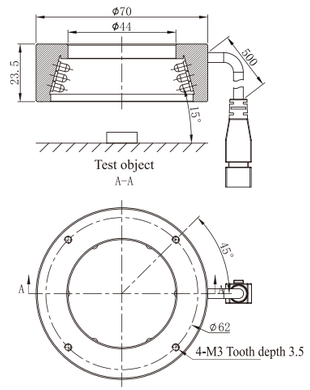

Ring lights P1-11
Bar lights P12-22
Coaxial lights P23-35
Surface lights P36-74
Dome lights P75-77
Shadowless lights P78-88
Point lights P89-90
AOI lights P91-93

RL7030

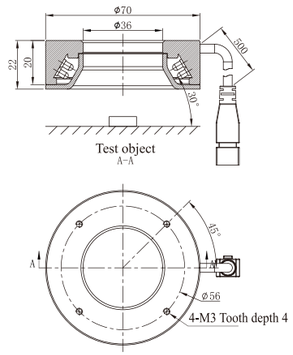

RL7045

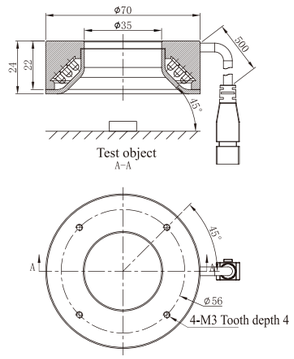

RL7060

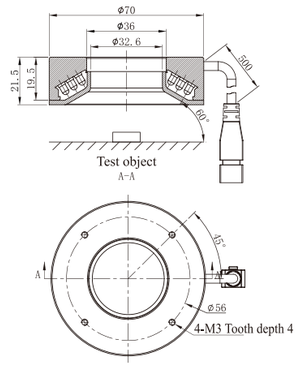

RL7075

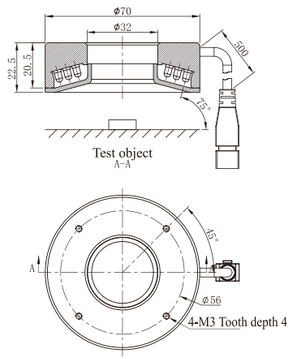

RL7090

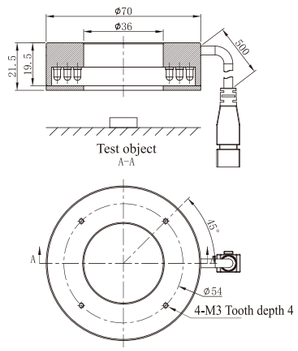

RL9000

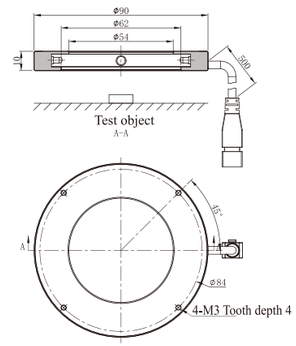

RL9015

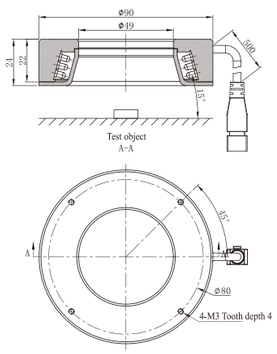

RL9030

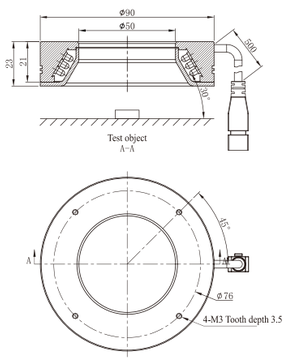

RL9045

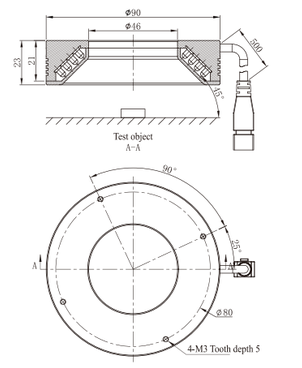

RL9060

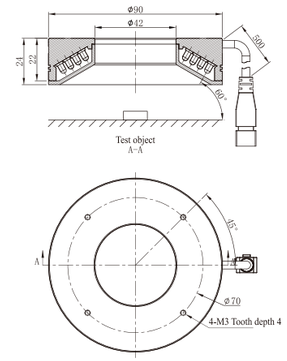

RL9075

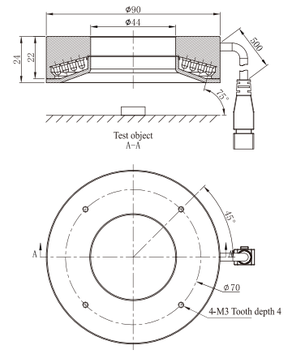

RL9090

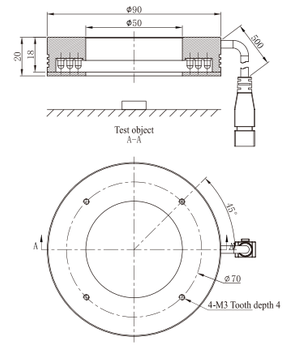

RL10000

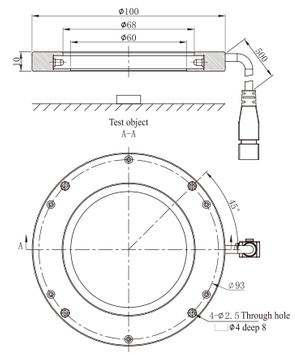

RL10015

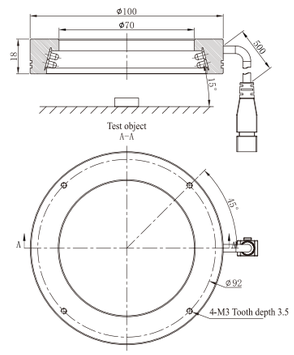

RL10030

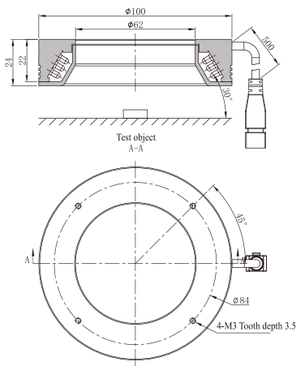

RL10045

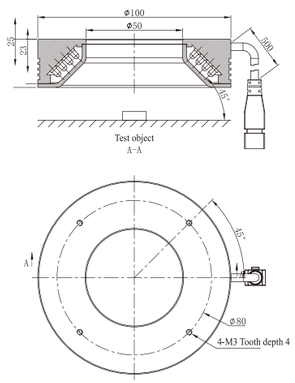

RL10060

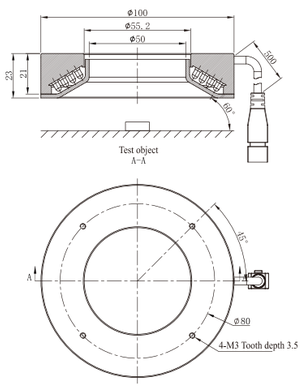

RL10075

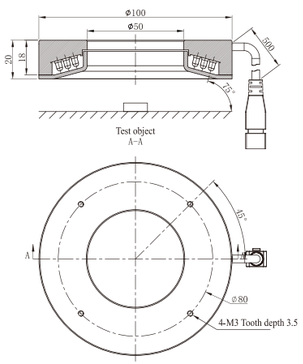

Ring lights P1-11
Bar lights P12-22
Coaxial lights P23-35
Surface lights P36-74
Dome lights P75-77
Shadowless lights P78-88
Point lights P89-90
AOI lights P91-93

RL10090

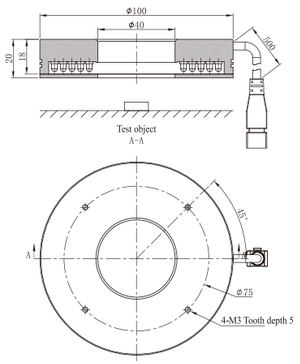

RL12000

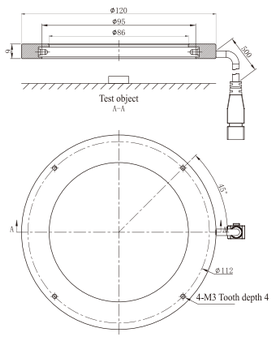

RL12015

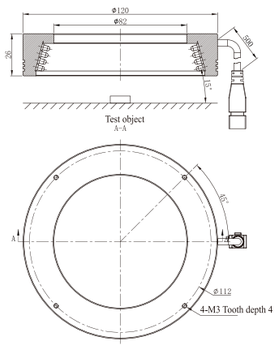

RL12030

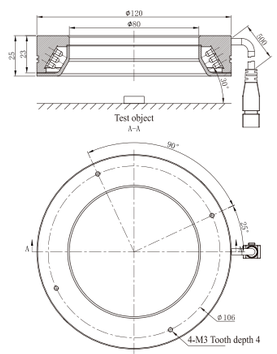

RL12045

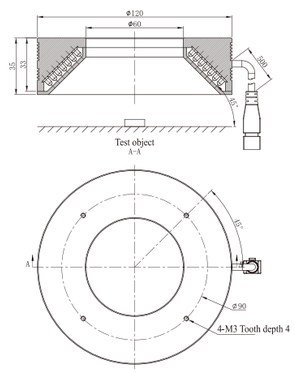

RL12060

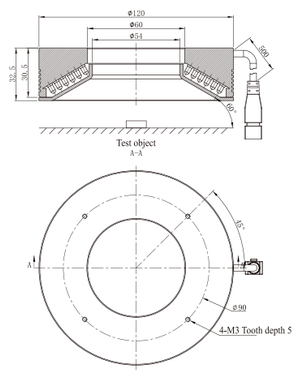

RL12075

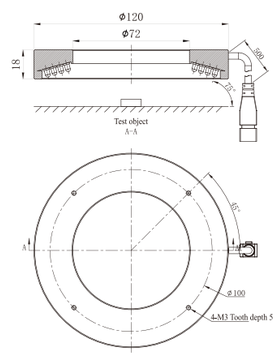

RL12090

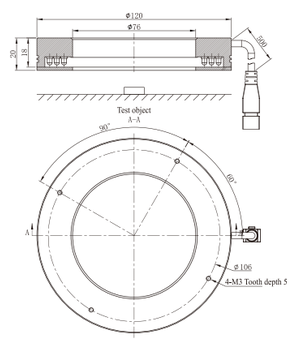

RL15000

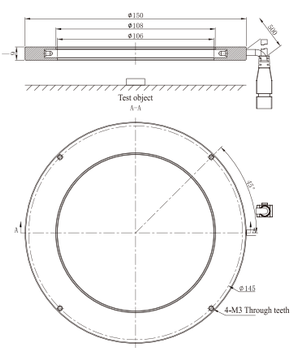

RL15015

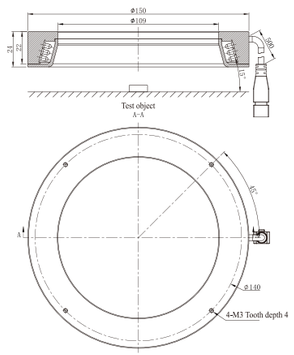

RL15030

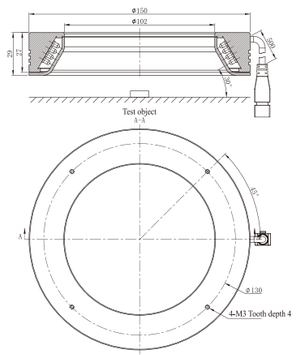

RL15045

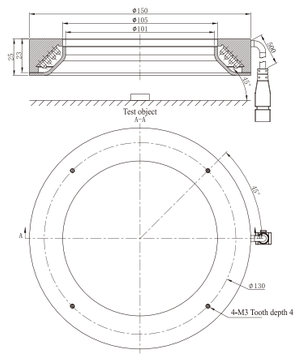

RL15060

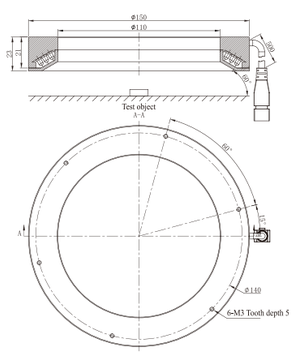

RL15075

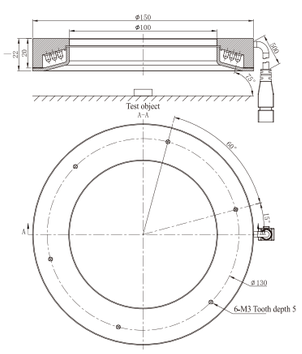

RL15090

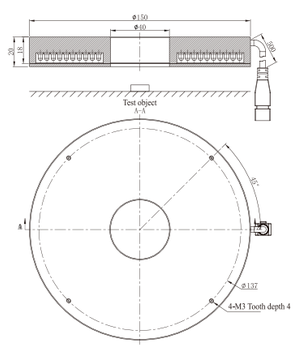

RL18000

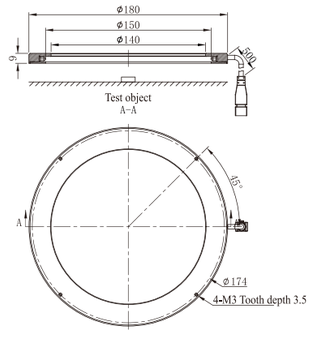

RL18015

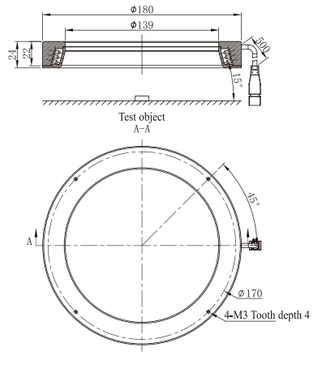

RL18030

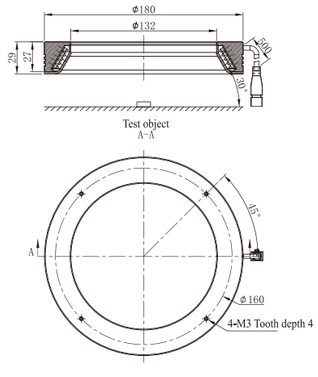

Ring lights P1-11
Bar lights P12-22
Coaxial lights P23-35
Surface lights P36-74
Dome lights P75-77
Shadowless lights P78-88
Point lights P89-90
AOI lights P91-93

RL18045

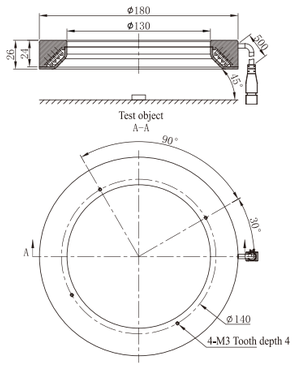

RL18060

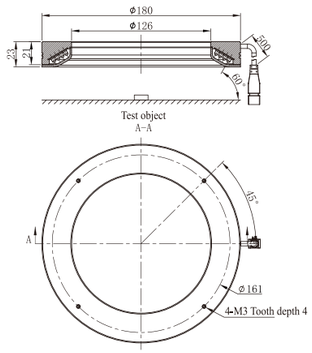

RL18075

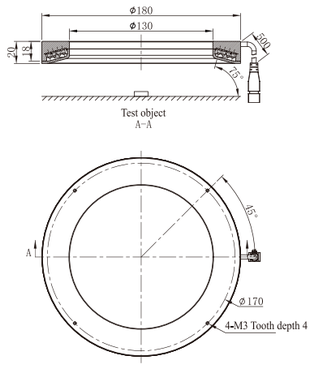

RL18090

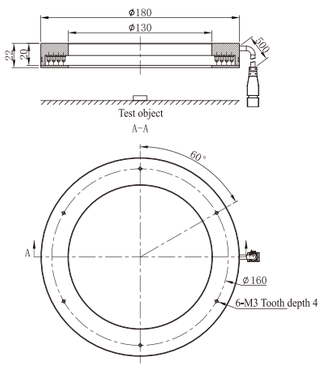

RL20000

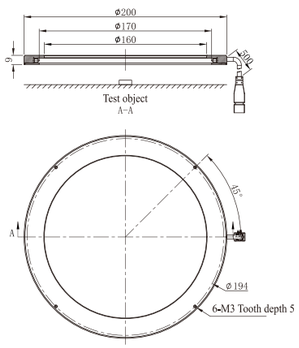

RL20015

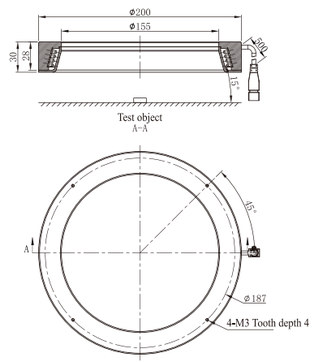

RL20030

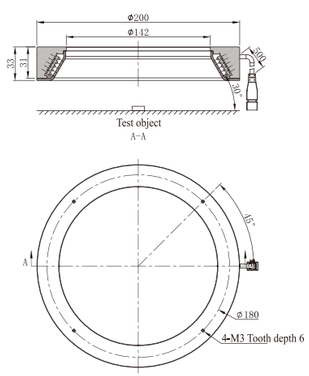

RL20045

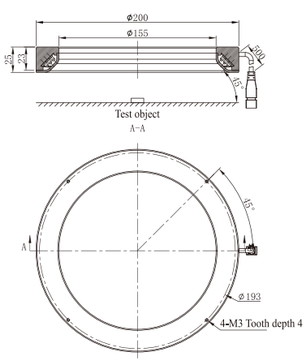

RL20060

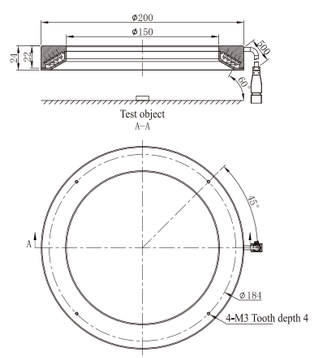

RL20075

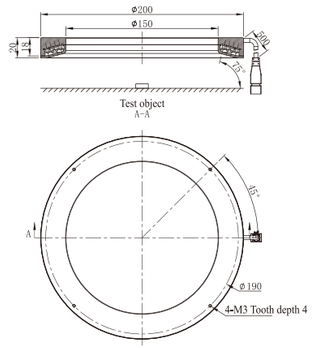

RL20090

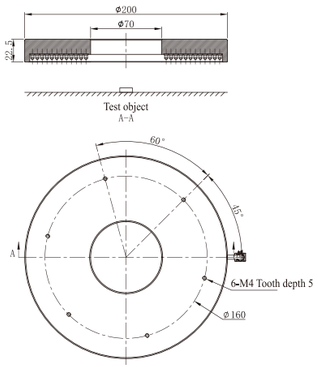

RL24000

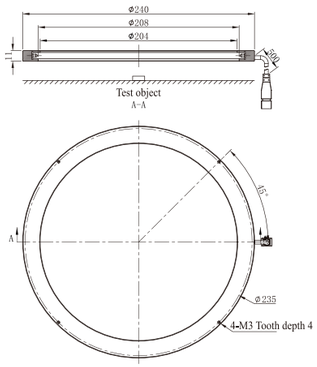

RL24015

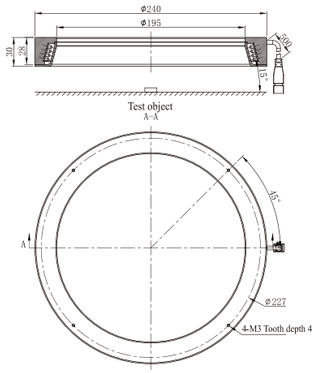

RL24030

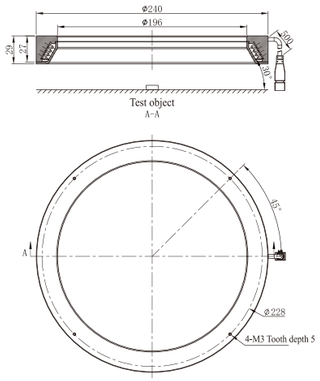

RL24045

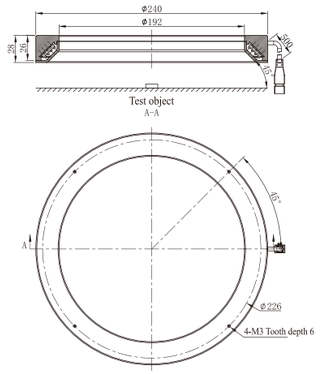

RL24060

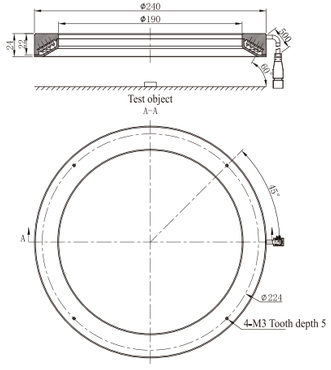

RL24075

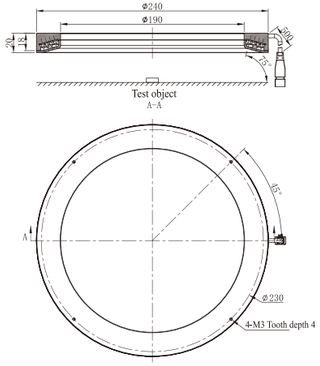

RL24090

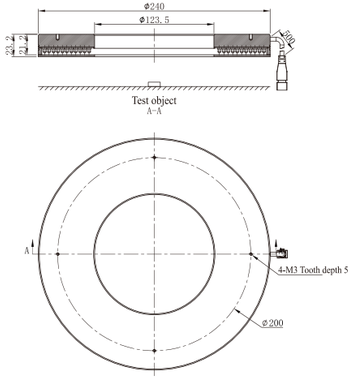

Ring lights P1-11
Bar lights P12-22
Coaxial lights P23-35
Surface lights P36-74
Dome lights P75-77
Shadowless lights P78-88
Point lights P89-90
AOI lights P91-93

Applications


Chip location detection

PCD version detection

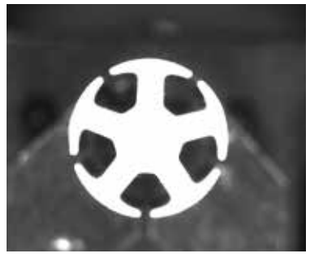
Motor Inspection


Mazda Positioning

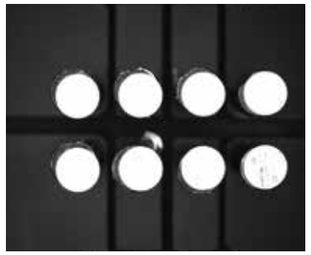
Center column film

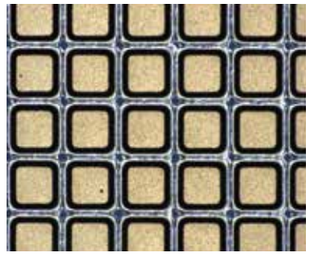
Wafer scratch, oxidation, corrosion inspection

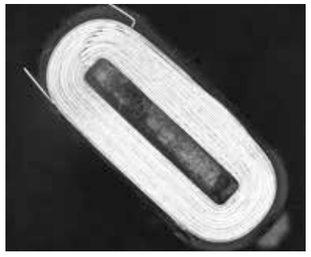
Copper circle placement

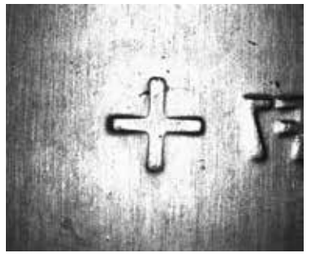
Laser Cutting Alignment

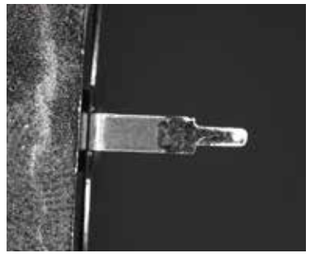
Pin has Wuxi detection

Electrofusion surface hole and character detection

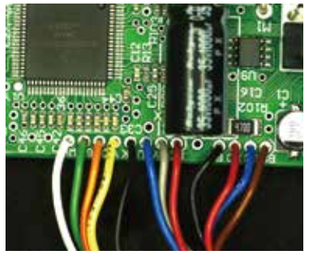
Wire color identification


Screw hole alignment

BL Series
Bar lights

Various sizes offer large flexibility; the illumination angle can be easily adjusted according to the detection requirements; the color can be matched according to the detection requirements; the optional diffuser plate can make the light diffuse evenly.

Features

- Flexible size and length
- Radiation angle and light transmittance can be adjusted at any time according to demand
- High-power SMD lamp beads can be replaced, and the color temperature, angle, and brightness can be adjusted according to requirements

Selection instructions

BL5718-R

- Lights color: R, G, B, W, etc.
- Lights profile width, unit: mm
- Lights profile length, unit: mm
- Bar lights

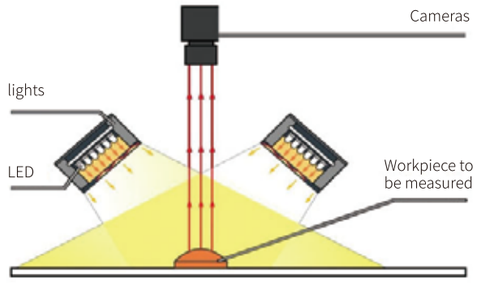

Basic product features

Wavelength/ color temperature	Red	620-630nm	Green	520-530nm
	Blue	465-475nm	White	5000-7000k
Save environment	Temperature	-20-60℃	Humidity	20-85%RH(non-condensing)
Use environment		-0-40℃		
Optional accessories	Lights extension line 3/5 meters optional			
Adapter controller	HDT24-70W-4DT、HDT24-150W-4DT Digital light source controller			

Scope of Adaptation

- Large field of view lighting is preferred
- Various character recognition
- Various visual inspections
- Various damage and dirt detection
- QR code/DM code/QR code/barcode reading
- Image scanning
- Electronic component identification and detection
- Connector pin detection

Parameter table

No.	Model	Color	Power（W）		Number of lamp beads	Number of light source lines	Dimensions（mm）		
			R	G/B/W			Long	Width	High
1	BL5718	●●●○	0.8	1.2	2	1	57	18	27
2	BL5728	●●●○	1.6	2.4	4	1	57	28	27
3	BL5738	●●●○	2.4	3.6	6	1	57	38	27
4	BL10218	●●●○	1.6	2.4	2	1	102	18	27
5	BL10228	●●●○	3.2	4.8	4	1	102	28	27
6	BL10238	●●●○	4.8	7.2	6	1	102	38	27
7	BL14718	●●●○	2.4	3.6	2	1	147	18	27
8	BL14728	●●●○	4.8	7.2	4	1	147	28	27
9	BL14738	●●●○	7.2	10.8	6	1	147	38	27
10	BL19218	●●●○	3.2	4.8	2	1	192	18	27
11	BL19228	●●●○	6.4	9.6	4	1	192	28	27
12	BL19238	●●●○	9.6	14.4	6	1	192	38	27
13	BL23718	●●●○	4	6	2	1	237	18	27
14	BL23728	●●●○	8	12	4	1	237	28	27
15	BL23738	●●●○	12	18	6	1	237	38	27
16	BL28218	●●●○	5.6	8.4	4	1	282	18	27
17	BL28228	●●●○	9.6	14.4	4	1	282	28	27
18	BL28238	●●●○	14.4	21.6	6	1	282	38	27
19	BL32718	●●●○	6.4	9.6	2	1	327	18	27
20	BL32728	●●●○	11.2	16.8	4	1	327	28	27
21	BL32738	●●●○	16.8	25.2	6	1	327	38	27
22	BL37218	●●●○	7.2	10.8	2	1	372	18	27
23	BL37228	●●●○	12.8	19.2	4	1	372	28	27
24	BL37238	●●●○	19.2	28.8	6	1	372	38	27
25	BL41718	●●●○	8	12	2	1	417	18	27
26	BL41728	●●●○	14.4	21.6	4	1	417	28	27
27	BL41738	●●●○	21.6	32.4	6	1	417	38	27
28	BL46218	●●●○	8.8	13.2	2	1	462	18	27
29	BL46228	●●●○	16	24	4	1	462	28	27

No.	Model	Color	Power（W）		Number of lamp beads	Number of light source lines	Dimensions（mm）		
			R	G/B/W			Long	Width	High
30	BL46238	●●●○	24	36	6	1	462	38	27
31	BL50718	●●●○	9.6	14.4	2	1	507	18	27
32	BL50728	●●●○	17.6	26.4	4	1	507	28	27
33	BL50738	●●●○	26.4	39.6	6	1	507	38	27
34	BL55218	●●●○	10.4	15.6	2	1	552	18	27
35	BL55228	●●●○	19.2	28.8	4	1	552	28	27
36	BL55238	●●●○	28.8	43.2	6	1	552	38	27
37	BL59718	●●●○	11.2	16.8	2	1	597	18	27
38	BL59728	●●●○	20.8	31.2	4	1	597	28	27
39	BL59738	●●●○	31.2	46.8	6	1	597	38	27
40	BL64218	●●●○	12	18	2	1	642	18	27
41	BL64228	●●●○	22.4	33.6	4	1	642	28	27
42	BL64238	●●●○	33.6	50.4	6	1	642	38	27
43	BL68718	●●●○	12.8	19.2	2	1	687	18	27
44	BL68728	●●●○	24	36	4	1	687	28	27
45	BL68738	●●●○	36	54	6	1	687	38	27
46	BL73218	●●●○	13.6	20.4	2	1	732	18	27
47	BL73228	●●●○	25.6	38.4	4	1	732	28	27
48	BL73238	●●●○	38.4	57.6	6	1	732	38	27
49	BL77718	●●●○	14.4	21.6	2	1	777	18	27
50	BL77728	●●●○	27.2	40.8	4	1	777	28	27
51	BL77738	●●●○	40.8	61.2	6	1	777	38	27
52	BL82218	●●●○	15.2	22.8	2	1	822	18	27
53	BL82228	●●●○	28.8	43.2	4	1	822	28	27
54	BL82238	●●●○	43.2	64.8	6	1	822	38	27
55	BL86718	●●●○	16	24	2	1	867	18	27
56	BL86728	●●●○	30.4	45.6	4	1	867	28	27
57	BL86738	●●●○	45.6	68.4	6	1	867	38	27
58	BL91218	●●●○	16.8	25.2	2	1	912	18	27
59	BL91228	●●●○	32	48	4	1	912	28	27
60	BL91238	●●●○	48	72	6	1	912	38	27
61	BL95718	●●●○	17.6	26.4	2	1	957	18	27
62	BL95728	●●●○	33.6	50.4	4	1	957	28	27
63	BL95738	●●●○	50.4	75.6	6	1	957	38	27
64	BL100218	●●●○	18.4	27.6	2	1	1002	18	27
65	BL100228	●●●○	35.2	52.8	4	1	1002	28	27
66	BL100238	●●●○	52.8	79.2	6	2	1002	38	27
67	BL104718	●●●○	19.2	28.8	2	1	1047	18	27
68	BL104728	●●●○	36.8	55.2	4	1	1047	28	27
69	BL104738	●●●○	55.2	82.8	6	2	1047	38	27
70	BL109218	●●●○	20	30	2	1	1092	18	27
71	BL109228	●●●○	38.4	57.6	4	1	1092	28	27
72	BL109238	●●●○	57.6	86.4	6	2	1092	38	27
73	BL113718	●●●○	20.8	31.2	2	1	1137	18	27
74	BL113728	●●●○	40	60	4	1	1137	28	27
75	BL113738	●●●○	60	90	6	2	1137	38	27
76	BL118218	●●●○	21.6	32.4	2	1	1182	18	27
77	BL118228	●●●○	41.6	62.4	4	1	1182	28	27
78	BL118238	●●●○	62.4	93.6	6	2	1182	38	27
79	BL122718	●●●○	22.4	33.6	2	1	1227	18	27
80	BL122728	●●●○	43.2	64.8	4	1	1227	28	27
81	BL122738	●●●○	64.8	97.2	6	2	1227	38	27
82	BL127218	●●●○	23.2	34.8	2	1	1272	18	27
83	BL127228	●●●○	44.8	67.2	4	1	1272	28	27

No.	Model	Color	Power（W）		Number of lamp beads	Number of light source lines	Dimensions（mm）		
			R	G/B/W			Long	Width	High
84	BL127238	●●●○	67.2	100.8	6	2	1272	38	27
85	BL131718	●●●○	24	36	2	1	1317	18	27
86	BL131728	●●●○	46.4	69.6	4	1	1317	28	27
87	BL131738	●●●○	69.6	104.4	6	2	1317	38	27
88	BL136218	●●●○	24.8	37.2	2	1	1362	18	27
89	BL136228	●●●○	48	72	4	1	1362	28	27
90	BL136238	●●●○	72	108	6	2	1362	38	27
91	BL140718	●●●○	25.6	38.4	2	1	1407	18	27
92	BL140728	●●●○	49.6	74.4	4	1	1407	28	27
93	BL140738	●●●○	74.4	111.6	6	2	1407	38	27
94	BL145218	●●●○	26.4	39.6	2	1	1452	18	27
95	BL145228	●●●○	51.2	76.8	4	1	1452	28	27
96	BL145238	●●●○	76.8	115.2	6	2	1452	38	27
97	BL149718	●●●○	27.2	40.8	2	1	1497	18	27
98	BL149728	●●●○	52.8	79.2	4	2	1497	28	27
99	BL149738	●●●○	79.2	118.8	6	2	1497	38	27
100	BL154218	●●●○	28	42	2	1	1542	18	27
101	BL154228	●●●○	54.4	81.6	4	2	1542	28	27
102	BL154238	●●●○	81.6	122.4	6	2	1542	38	27
103	BL158718	●●●○	28.8	43.2	2	1	1587	18	27
104	BL158728	●●●○	56	84	4	2	1587	28	27
105	BL158738	●●●○	84	126	6	2	1587	38	27
106	BL163218	●●●○	29.6	44.4	2	1	1632	18	27
107	BL163228	●●●○	57.6	86.4	4	2	1632	28	27
108	BL163238	●●●○	86.4	129.6	6	2	1632	38	27
109	BL167718	●●●○	30.4	45.6	2	1	1677	18	27
110	BL167728	●●●○	59.2	88.8	4	2	1677	28	27
111	BL167738	●●●○	88.8	133.2	6	2	1677	38	27
112	BL172218	●●●○	31.2	46.8	2	1	1722	18	27
113	BL172228	●●●○	60.8	91.2	4	2	1722	28	27
114	BL172238	●●●○	91.2	136.8	6	2	1722	38	27
115	BL176718	●●●○	32	48	2	1	1767	18	27
116	BL176728	●●●○	62.4	93.6	4	2	1767	28	27
117	BL176738	●●●○	93.6	140.4	6	2	1767	38	27
118	BL181218	●●●○	32.8	49.2	2	1	1812	18	27
119	BL181228	●●●○	64	96	4	2	1812	28	27
120	BL181238	●●●○	96	144	6	2	1812	38	27
121	BL185718	●●●○	33.6	50.4	2	1	1857	18	27
122	BL185728	●●●○	65.6	98.4	4	2	1857	28	27
123	BL185738	●●●○	98.4	147.6	6	2	1857	38	27
124	BL190218	●●●○	34.4	51.6	2	1	1902	18	27
125	BL190228	●●●○	67.2	100.8	4	2	1902	28	27
126	BL190238	●●●○	100.8	151.2	6	2	1902	38	27

Product Dimensions（mm）

BL-18

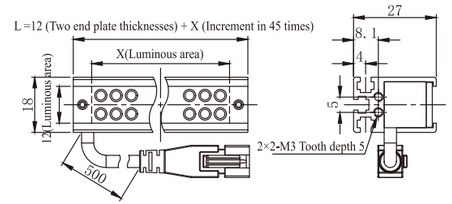

BL-28

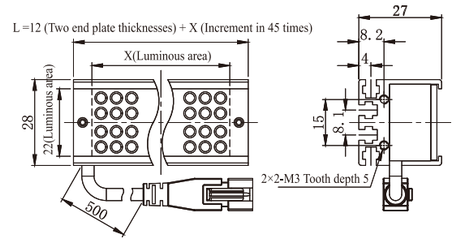

BL-38

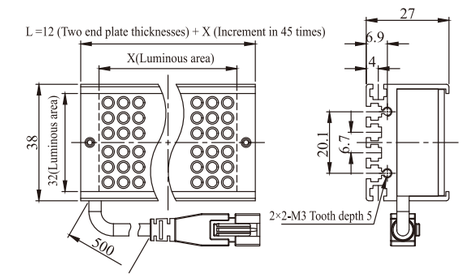

Applications

Car stopper character detection / QR code recognition

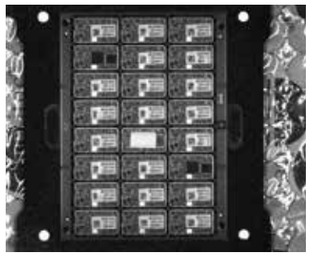

Bluetooth chip module positioning detection

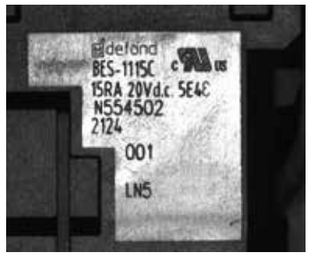

Character detection

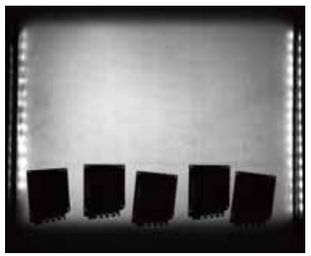

PCB board positioning gripping

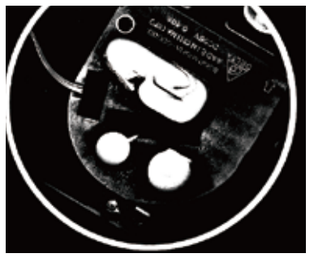

Unmanned Aerial Vehicle Inspection

Axle wheel alignment grip item

Ring lights P1-11
Bar lights P12-22
Coaxial lights P23-35
Surface lights P36-74
Dome lights P75-77
Shadowless lights P78-88
Point lights P89-90
AOI lights P91-93

HBL Series

Highlight bar lights

The brightness is 3 times more than that of standard strip lights, and the length can be customized. High-power LEDs are used to achieve long working distance lighting. Colors can be matched according to testing needs. Optional diffuser plate is available to spread the light evenly.

Features

- Flexible size and length.
- Radiation angle and light transmittance can be adjusted at any time according to demand.
- High-power SMD lamp beads can be replaced, and the color temperature, angle, and brightness can be adjusted according to requirements.

Selection instructions

HBL10026-R

- Lights color: R, G, B, W, etc.
- Lights luminous area width, Unit : mm
- Lights luminous area length, Unit:mm
- Highlight bar lights

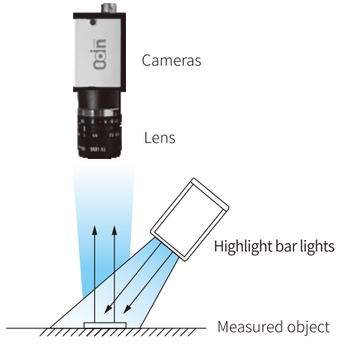

Basic product features

Wavelength/ color temperature	Red	620-630nm	Green	520-530nm
	Blue	465-475nm	White	5000-7000k
Save environment	Temperature	-20-60℃	Humidity	20-85%RH(non-condensing)
Use environment		-0-40℃		
Optional accessories	Lights extension line 3/5 meters optional			
Adapter controller	HDT24-70W-4DT、HDT24-150W-4DT Digital light source controller			

Scope of Adaptation

- Large suitable for all applications of strip light
- Various character recognition
- Various appearance inspections
- QR code/DM code/QR code/barcode reading
- Various damage and dirt detection
- Image scanning
- Inspection of parts on the substrate
- High-speed assembly line lighting

Parameter table

No.	Model	Color	Power（W）		Number of lamp beads	Dimensions（mm）		
			R	G/B/W		Long	Width	High
1	HBL10026	●●●○	12	12	1	100	26	58
2	HBL20026	●●●○	17	23	1	200	26	58
3	HBL30026	●●●○	28	40	1	300	26	58
4	HBL40026	●●●○	34	45	1	400	26	58

Product Dimensions（mm）

HBL10026

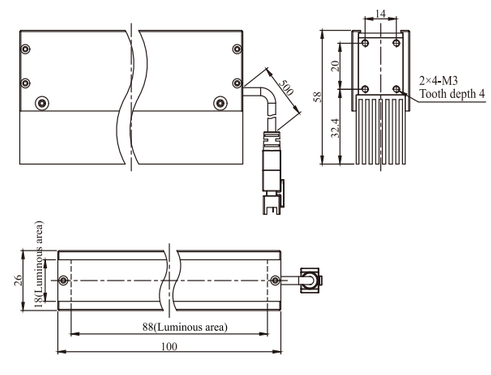

HBL20026

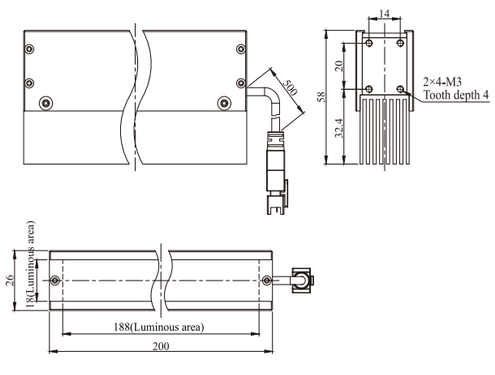

Ring lights P1-11
Bar lights P12-22
Coaxial lights P23-35
Surface lights P36-74
Dome lights P75-77
Shadowless lights P78-88
Point lights P89-90
AOI lights P91-93

HBL30026

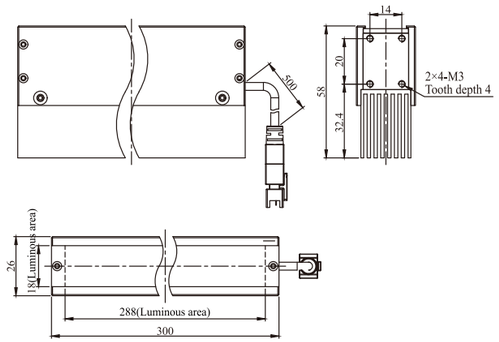

HBL40026

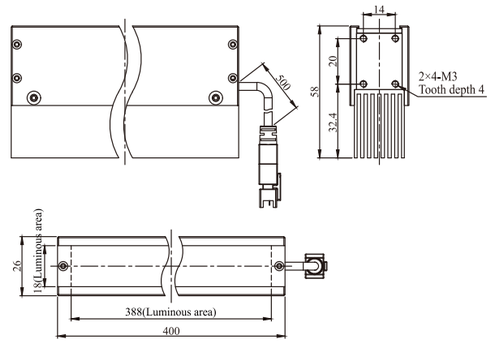

Applications

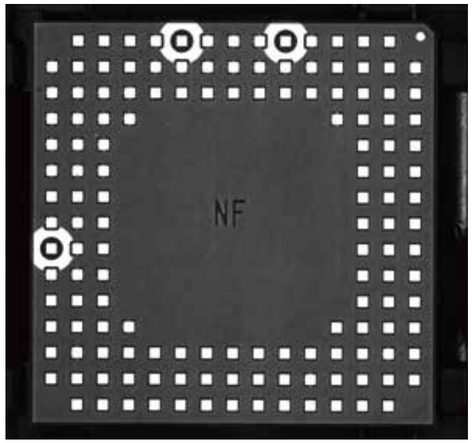

PCB scratches, copper leakage, polarity angle residue, laser depaneling copper leakage detection

Chip character detection

FAL Series

Four sides adjustable lights

The four-sided lighting unit allows independently adjustment of the angle, brightness, and the height. It has good uniformity and large irradiation area. With its own adjustable angle design, it is easy to install and use.

Features

- Good uniformity and large irradiation area.
- The four-sided lighting unit can be controlled individually, and can be adjusted freely from 0 to 90 degrees.
- Good versatility, suitable for many occasions, the first choice for large-area lighting.

Selection instructions

FAL150-R

- Lights color: R, G, B, W, etc.
- Lights outline size, if the square is the side length, rectangle is the length - width, unit:mm
- Four sides adjustable lights

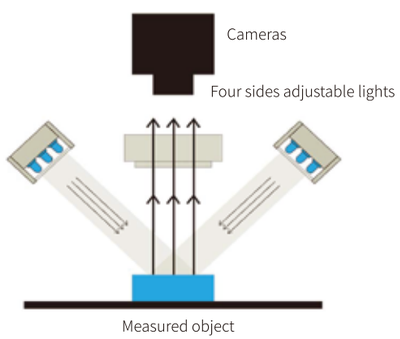

Basic product features

Wavelength/ color temperature	Red	620-630nm	Green	520-530nm
	Blue	465-475nm	White	5000-7000k
Save environment	Temperature	-20-60℃	Humidity	20-85%RH(non-condensing)
Use environment		-0-40℃		
Optional accessories	Lights extension line 3/5 meters optional			
Adapter controller	HDT24-70W-4DT、HDT24-150W-4DT Digital light source controller			

Scope of Adaptation

- Solder inspection
- Touch screen scratch detection
- keyboard character recognition
- Appearance inspection of solar panels
- External Crack Detection of Ceramic Packages
- Electronic component inspection
- Packaging barcode detection
- Packaging barcode detection

Parameter table

No.	Model	Color	Power（W）		Dimensions（mm）		
			R	G/B/W	Long	Width	High
1	FAL150	●●●○	6.4	9.6	150	150	38
2	FAL170	●●●○	9.6	15	170	170	45
3	FAL195	●●●○	13	20	195	195	38
4	FAL215	●●●○	20	29	215	215	45
5	FAL240	●●●○	20	29	240	240	38
6	FAL260	●●●○	29	44	260	260	45

Product Dimensions（mm）

FAL150

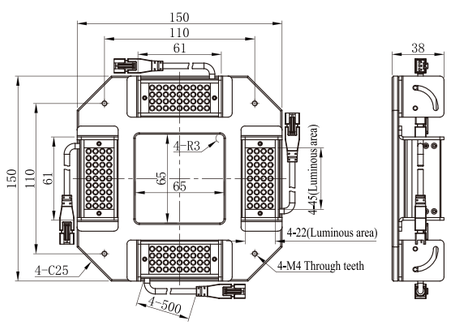

FAL170

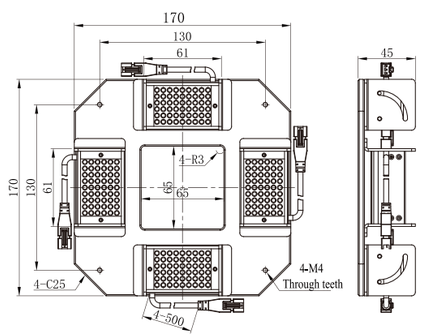

FAL195

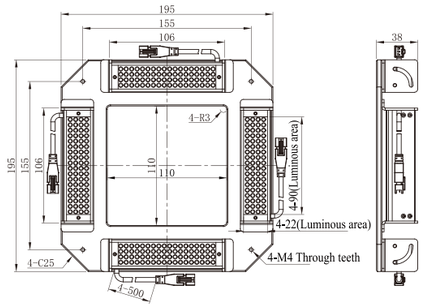

FAL215

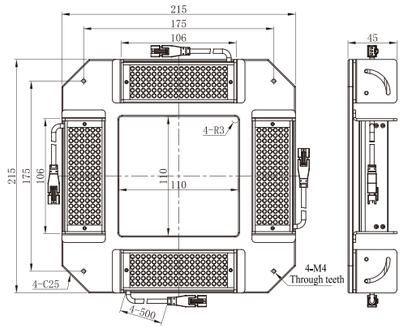

FAL240

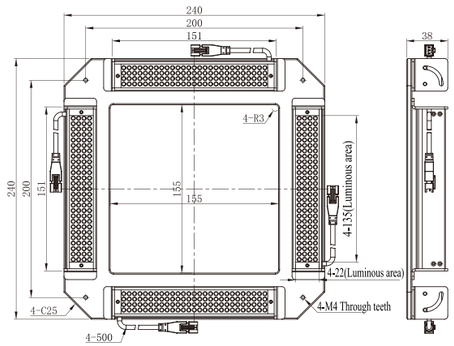

FAL260

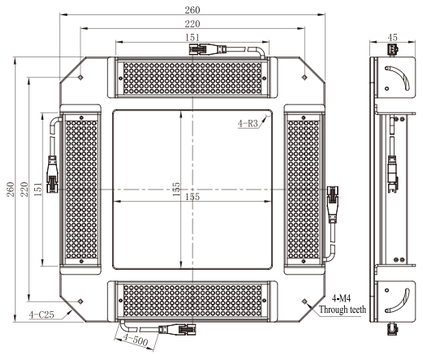

Applications

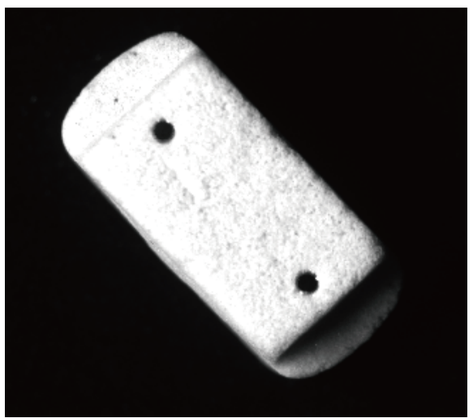

Ceramic substrate appearance inspection

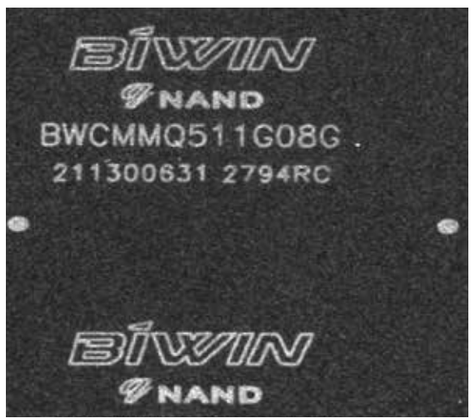

Character detection

Ring lights P1-11
Bar lights P12-22
Coaxial lights P23-35
Surface lights P36-74
Dome lights P75-77
Shadowless lights P78-88
Point lights P89-90
AOI lights P91-93

COL Series
Coaxial lights

The high-density LED array emits high-intensity uniform light. The light reflected through a semi-permeable surface with a special layer is on the same axis as the phase surface. It therefore can eliminate the re-imaging and reflection of the collected image. The imaging is clear, and the heat dissipation is efficient. It can highlight the uneven surface of the object and overcome the interference caused by surface reflection. It is suitable for the detection of scratches on the surface of workpieces that have been mirror-processed.

Features

- The use of one-piece shell to dissipate heat more efficiently
- Special coating optical beam splitter without ghosting
- High-density LED arrangement, bright and uniform
- Flexible adjustment of brightness and color temperature in the same size

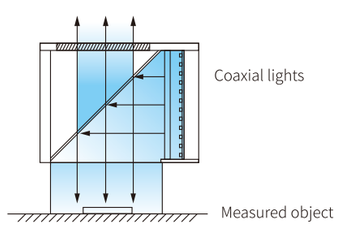

Selection instructions

COL30-R

- Lights color: R, G, B, W, etc.
- The size of the luminous area, if square, is the side length, if rectangular, is the length - width, unit: mm
- Coaxial lights

Basic product features

Wavelength/ color temperature	Red	620-630nm	Green	520-530nm
	Blue	465-475nm	White	5000-7000k
Save environment	Temperature	-20-60℃	Humidity	20-85%RH(non-condensing)
Use environment		-0-40℃		
Optional accessories	Lights extension line 3/5 meters optional			
Adapter controller	HDT24-70W-4DT、HDT24-150W-4DT Digital light source controller			

Scope of Adaptation

- Defect detection of scratches, bubbles and other defects on the surface of highly reflective objects
- Two-dimensional code, one-dimensional code barcode reading
- Mark position
- Breakage detection of chips and silicon wafers
- Dimensional measurement
- LED surface defect detection

Parameter table

No.	Model	Color	Power（W）		Luminous surface size	Dimensions（mm）		
			R	G/B/W		Long	Width	High
1	COL30	●●●○	2.4	4.5	30×30	52	36	36
2	COL40	●●●○	2.4	5.4	39×38	70	46	47
3	COL50	●●●○	5.4	5.4	50×50	78	58	58
4	COL60	●●●○	6.2	6.2	60×61	90	70	70
5	COL70	●●●○	7	14	74×70	130	78	80
6	COL80	●●●○	7.7	14	80×80	114	88	88
7	COL100	●●●○	17	22	102×100	134	111	105
8	COL120	●●●○	23	27	120×120	157	128	128
9	COL130	●●●○	24	37	130×130	182	140	138
10	COL140	●●●○	33	36	140×140	188	150	146

Product Dimensions（mm）

COL30

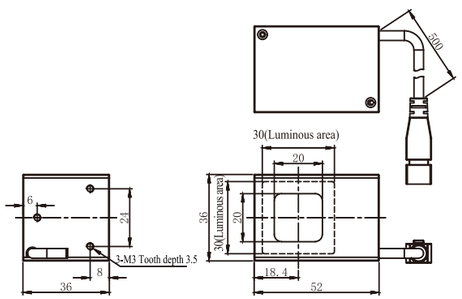

COL40

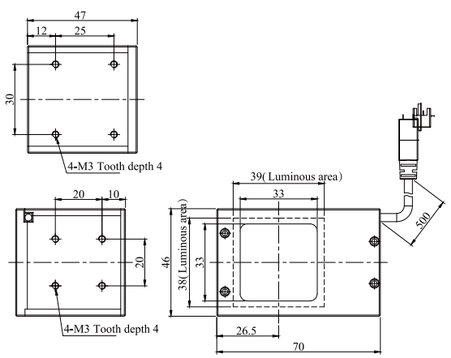

Ring lights P1-11
Bar lights P12-22
Coaxial lights P23-35
Surface lights P36-74
Dome lights P75-77
Shadowless lights P78-88
Point lights P89-90
AOI lights P91-93

COL50

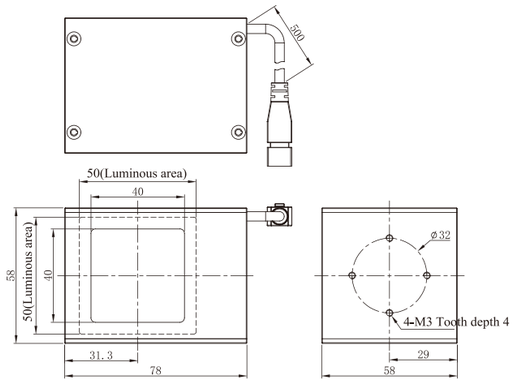

COL60

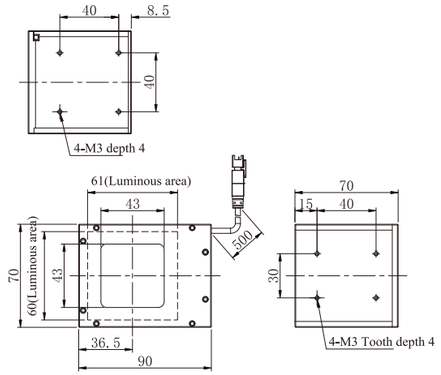

COL70

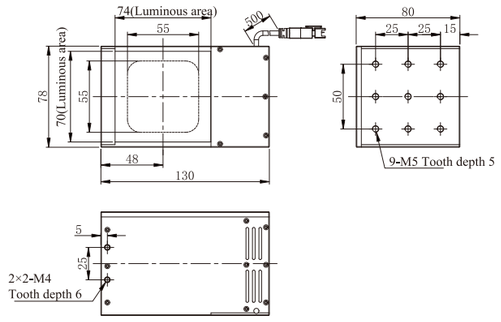

COL80

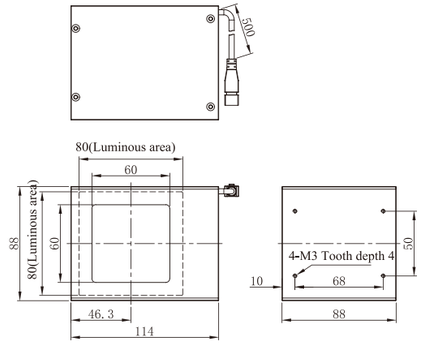

COL100

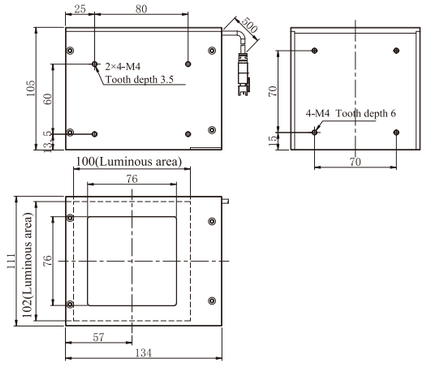

COL120

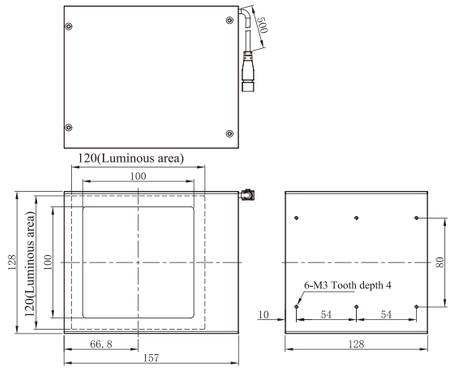

COL130

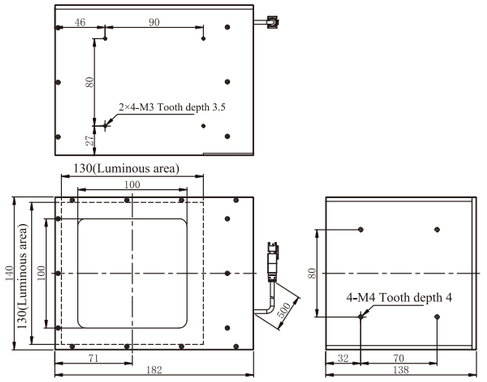

COL140

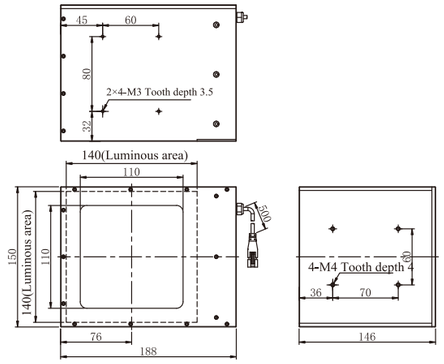

Applications

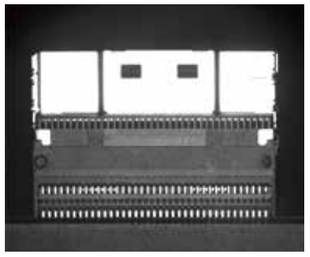

Pin Inspection

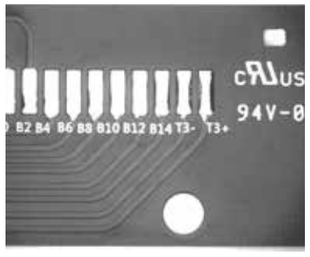

PCB board pin pre-solder inspection

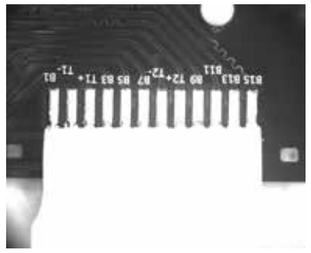

CB board pin post-solder inspection

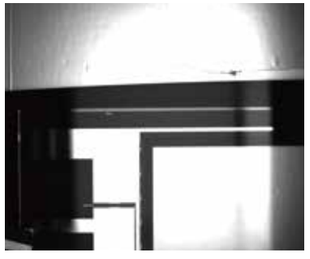

In-vehicle display detection

Connector pin inspection test

Lens cover character detection

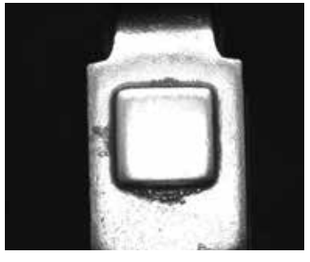

Solder Inspection

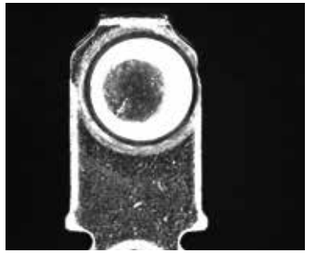

Solder overflow detection

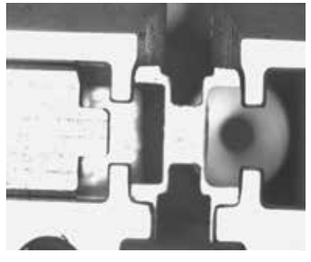

Bracket assembly alignment

Ring lights P1-11
Bar lights P12-22
Coaxial lights P23-35
Surface lights P36-74
Dome lights P75-77
Shadowless lights P78-88
Point lights P89-90
AOI lights P91-93

ACOL Series

Corner coaxial lights

The diffused light is evenly emitted in the vertical direction to the camera, and the special coated optical beam splitter has no ghosting, leading to good uniformity, high brightness, clear imaging and small installation space.

Features

- The use of one-piece shell to dissipate heat more efficiently
- Special coating optical beam splitter without ghosting
- High-density LED arrangement, bright and uniform
- Flexible adjustment of brightness and color temperature in the same size

Selection instructions

ACOL40-R

- Lights color: R, G, B, W, etc.
- The size of the luminous area, if square, is the side length, if rectangular, is the length - width, unit: mm
- Corner coaxial lights

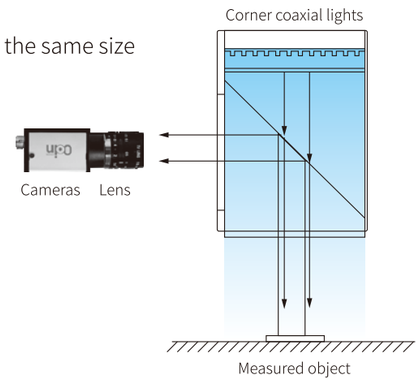

Basic product features

Wavelength/ color temperature	Red	620-630nm	Green	520-530nm
	Blue	465-475nm	White	5000-7000k
Save environment	Temperature	-20-60°C	Humidity	20-85%RH(non-condensing)
Use environment		-0-40°C		
Optional accessories	Lights extension line 3/5 meters optional			
Adapter controller	HDT24-70W-4DT、HDT24-150W-4DT Digital light source controller			

Scope of Adaptation

- Mark point location and contour positioning
- 2D code and barcode recognition
- Various size measurement
- Metal surface defect detection
- Camera appearance inspection
- PCB copper leakage detection
- Screen circuit detection
- LED lamp holder inspection

Parameter table

No.	Model	Color	Power (W)		Luminous surface size	Dimensions (mm)		
			R	G/B/W		Long	Width	High
1	ACOL40	●●●○	2.4	5.4	40×38	70	46	47
2	ACOL50	●●●○	5.4	5.4	50×50	87	60	60
3	ACOL60	●●●○	6.2	6.2	61×60	90	70	70
4	ACOL70	●●●○	7	14	70×70	105	80	78
5	ACOL80	●●●○	7.7	14	80×80	114	92	90

Product Dimensions (mm)

ACOL40

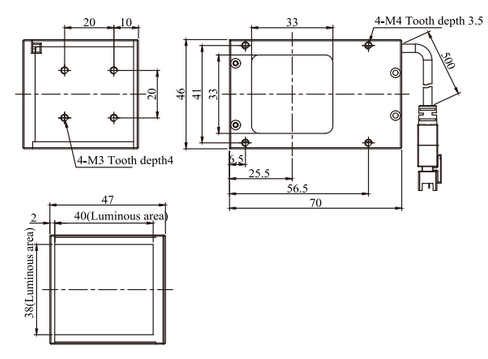

ACOL50

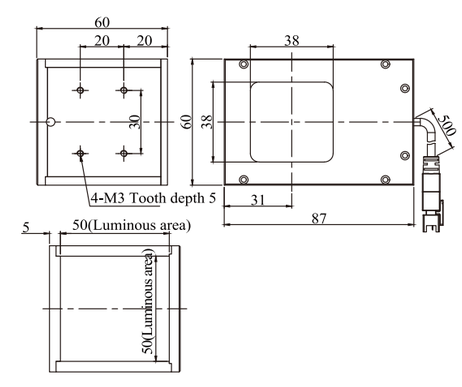

Ring lights P1-11
Bar lights P12-22
Coaxial lights P23-35
Surface lights P36-74
Dome lights P75-77
Shadowless lights P78-88
Point lights P89-90
AOI lights P91-93

ACOL60

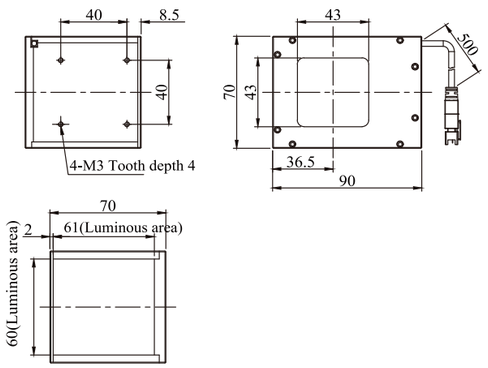

ACOL70

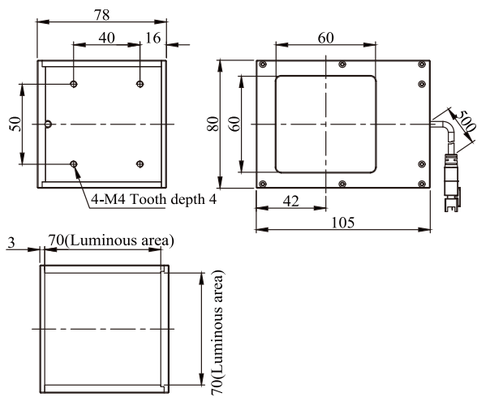

ACOL80

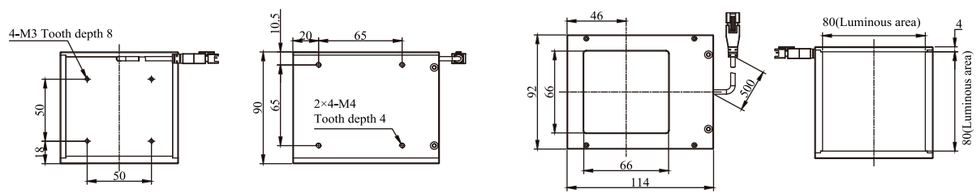

Applications

QR code recognition

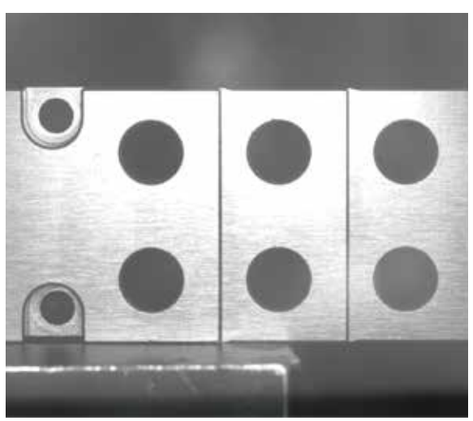

Lens base round hole positioning

COPL Series

Parallel coaxial lights

This light can emit parallel light with high parallelism from the coaxial direction to the camera. It has high brightness and good uniformity. It can be used as a backlight. Compared with the telecentric parallel light source, the cost is low and the volume is small.

Features

- The use of one-piece shell to dissipate heat more efficiently
- Special coating optical beam splitter without ghosting
- High-density LED arrangement, bright and uniform
- Flexible adjustment of brightness and color temperature in the same size

Selection instructions

COPL30-R

- Lights color: R, G, B, W, etc.
- The size of the luminous area, if square, is the side length, if rectangular, is the length - width, unit: mm
- Parallel coaxial lights

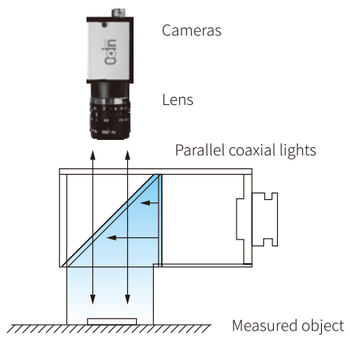

Ring lights P1-11
Bar lights P12-22
Coaxial lights P23-35
Surface lights P36-74
Dome lights P75-77
Shadowless lights P78-88
Point lights P89-90
AOI lights P91-93

Basic product features

Wavelength/ color temperature	Red	620-630nm	Green	520-530nm
	Blue	465-475nm	White	5000-7000k
Save environment	Temperature	-20-60℃	Humidity	20-85%RH(non-condensing)
Use environment		-0-40℃		
Optional accessories	Lights extension line 3/5 meters optional			
Adapter controller	HDT24-70W-4DT、HDT24-150W-4DT Digital light source controller			

Scope of Adaptation

- Scratch detection on smooth surfaces
- Glue presence or absence detection
- Screen shift detection
- Detect slight scratches on the surface of the mobile phone screen
- Surface bump detection
- Detection of fine burrs on product contours
- Various size measurements

Parameter table

No.	Model	Color	Power（W）		Luminous surface size	Dimensions（mm）		
			R	G/B/W		Long	Width	High
1	COPL30	●●●○	3	3	30×30	121	40	38
2	COPL40	●●●○	3	3	40×40	135	50	48
3	COPL50	●●●○	3	3	50×50	140	60	58
4	COPL60	●●●○	3	3	60×60	151	70	68

Product Dimensions（mm）

COPL30

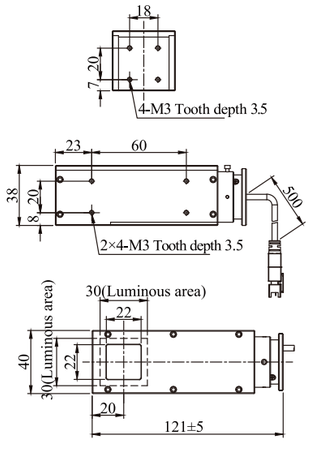

COPL40

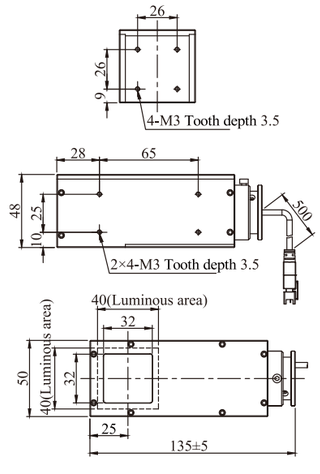

COPL50

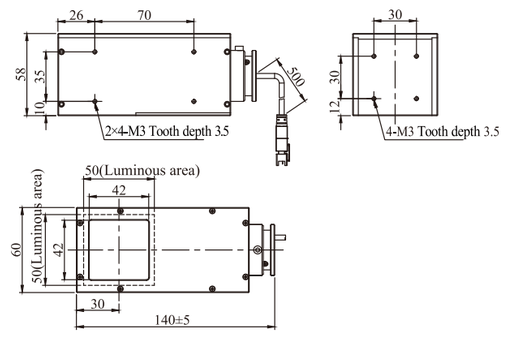

COPL60

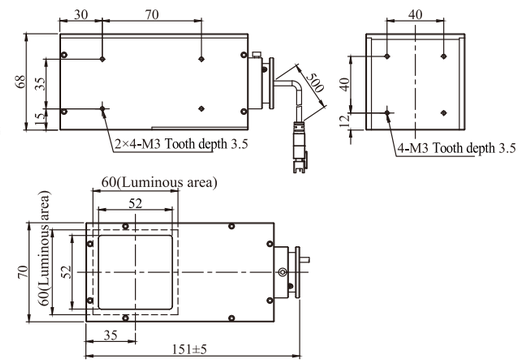

Applications

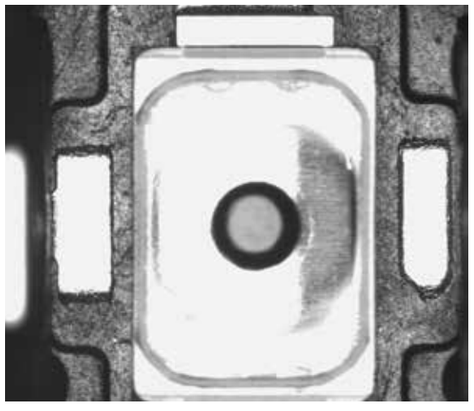

Dispense Solder Paste - Before Dispense

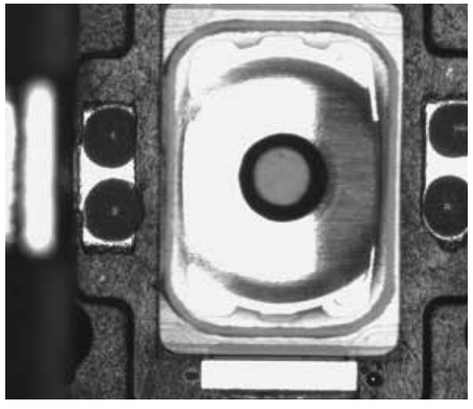

Solder paste dispensing-after dispensing

Laser altimetry and positioning detection

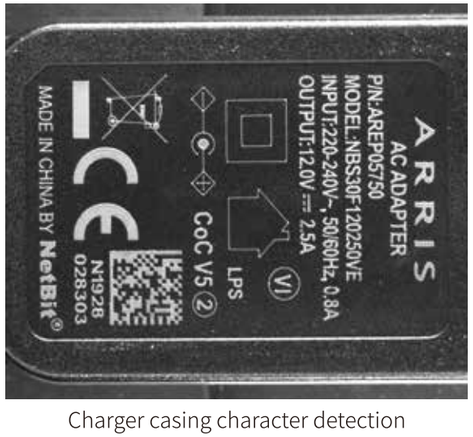

Charger casing character detection

FCL Series

Planar coaxial lights

This type of light has the following characteristics: good uniformity, high brightness, clear imaging, efficient heat dissipation, prolong life, special coating beam splitter, and reduced light loss. It can highlight the uneven surface of the object, can overcome the interference caused by surface reflection.

Features

- Special light guide material to ensure uniform and vertical light irradiation
- In some occasions, it can be used instead of coaxial light and dome light, it saves installation space
- It can achieve all-round irradiation of the product

Selection instructions

FCL100-R

- Lights color: R, G, B, W, etc.
- Lights luminous area width and length , Unit : mm
- Planar coaxial lights

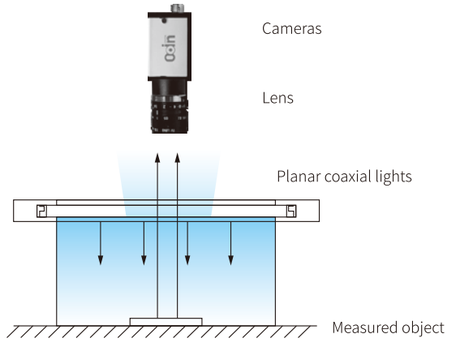

Basic product features

Wavelength/ color temperature	Red	620-630nm	Green	520-530nm
	Blue	465-475nm	White	5000-7000k
Save environment	Temperature	-20-60˚C	Humidity	20-85%RH(non-condensing)
Use environment		-0-40˚C		
Optional accessories	Lights extension line 3/5 meters optional			
Adapter controller	HDT24-70W-4DT、HDT24-150W-4DT Digital light source controller			

Scope of Adaptation

- Pharmaceutical packaging surface inspection
- Cap color difference detection
- Glue presence detection
- Scratch character detection on product surface
- Film surface defect detection
- Liquid surface detection
- Two-dimensional code recognition
- Metal parts burr detection

Parameter table

No.	Model	Color	Power（W）		Luminous surface size	Dimensions（mm）		
			R	G/B/W		Long	Width	High
1	FCL50	●●●○	3.6	3.6	50×50	90	90	10
2	FCL100	●●●○	7.2	11	100×100	140	140	10
3	FCL150	●●●○	11	15	150×150	190	190	10
4	FCL200	●●●○	15	22	200×200	240	240	10

Product Dimensions（mm）

FCL50

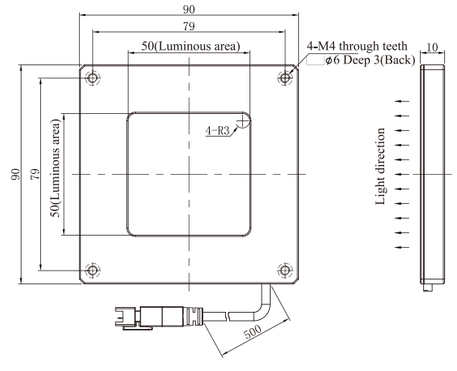

FCL100

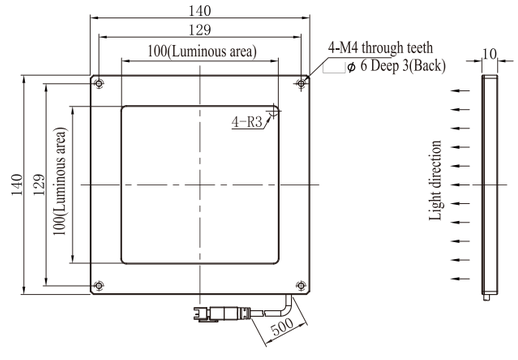

Ring lights P1-11
Bar lights P12-22
Coaxial lights P23-35
Surface lights P36-74
Dome lights P75-77
Shadowless lights P78-88
Point lights P89-90
AOI lights P91-93

FCL150

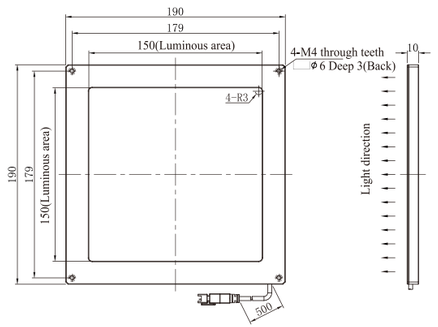

FCL200

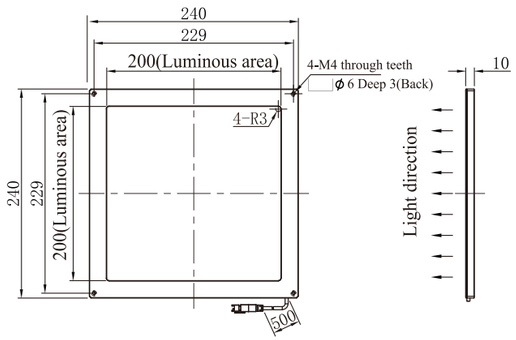

Applications

Charger casing character detection

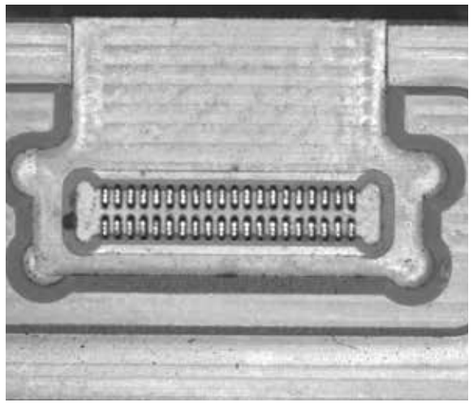

FPC Alignment

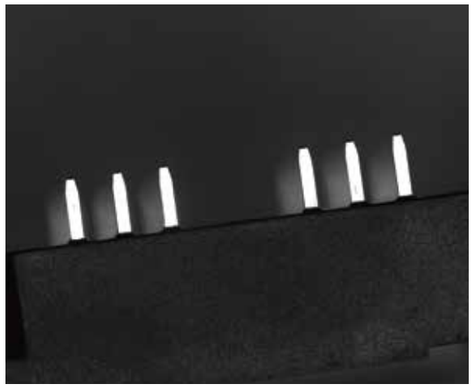

Terminal pin spacing detection

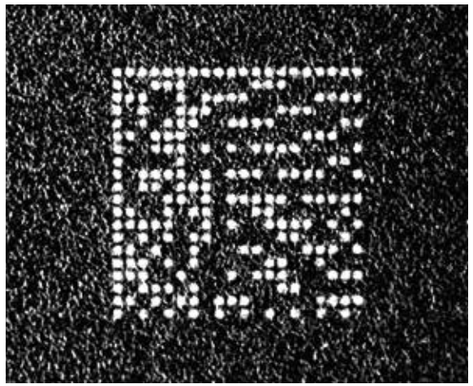

DM code recognition

FL Series

Side surface lights

This light is multi-sided luminous, small in size and cost-effective. It is flexible in size, very convenient for customization, and supports a wide range of applications. It offers a variety of installation methods, and is convenient for customer installation.

Features

- Multi-sided luminescence, overall uniformity of 92%-98%
- The ultra-thin design can reach 6mm, which can meet the needs of different customers
- Flexible size design, can be adjusted according to customer requirements
- Flexible installation, can be fixed by screws, fixed by pressing edge
- The performance of optical parameters is excellent; the batch requirements of lamp beads are strictly screened, and the working parameters are stable when starting up continuously
- First-class optical materials, built-in anti-collision design, to ensure the safety of lamp beads

Selection instructions

FL5050-R

- Lights color: R, G, B, W, etc.
- Lights luminous area width, Unit : mm
- Lights luminous area length, Unit:mm
- Side surface lights

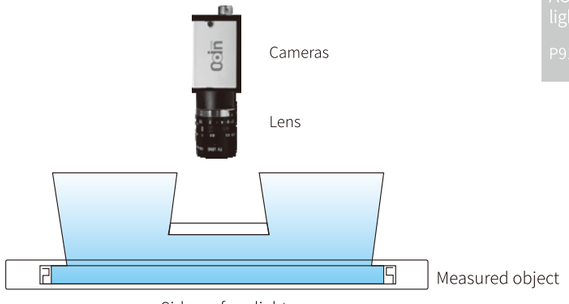

Side surface lights

Ring lights P1-11
Bar lights P12-22
Coaxial lights P23-35
Surface lights P36-74
Dome lights P75-77
Shadowless lights P78-88
Point lights P89-90
AOI lights P91-93

Basic product features

Wavelength/ color temperature	Red	620-630nm	Green	520-530nm
	Blue	465-475nm	White	5000-7000k
Save environment	Temperature	-20-60℃	Humidity	20-85%RH(non-condensing)
Use environment		-0-40℃		
Optional accessories	Lights extension line 3/5 meters optional			
Adapter controller	HDT24-70W-4DT、HDT24-150W-4DT Digital light source controller			

Scope of Adaptation

- High-precision dimensional measurement
- Screen positioning fits
- Camera module detection
- Internal foreign body detection
- Whether through hole detection is possible
- Mobile phone light guide plate detection
- Infusion set packaging, liquid high level detection
- Detection of foreign matter and glue on the metal surface

Parameter table

No.	Model	Color	Power（W）		Luminous surface size	Dimensions（mm）		
			R	G/B/W		Long	Width	High
1	FL5050	●●●○	3.9	3.9	50×50	90	90	13
2	FL6060	●●●○	7.7	7.7	60×60	100	100	13
3	FL8080	●●●○	7.7	7.7	80×80	120	120	13
4	FL9070	●●●○	7.7	7.7	90×90	130	110	13
5	FL11080	●●●○	7.7	12	110×80	150	120	13
6	FL100100	●●●○	7.7	12	100×100	140	140	13
7	FL110100	●●●○	7.7	12	110×100	150	140	13
8	FL110110	●●●○	7.7	12	110×110	150	150	13
9	FL120110	●●●○	7.7	12	120×110	160	150	13
10	FL150120	●●●○	12	16	150×120	190	160	13
11	FL290190	●●●○	20	27	290×190	330	230	13
12	FL380210	●●●○	24	35	380×210	420	250	13
13	FL390290	●●●○	24	35	390×290	430	330	13
14	FL460380	●●●○	27	47	460×380	500	420	13
15	FL570450	●●●○	35	58	570×450	610	490	13
16	FL570550	●●●○	35	58	570×550	610	590	13
17	FL590390	●●●○	35	58	590×390	630	430	13
18	FL590440	●●●○	35	58	590×440	630	480	13
19	FL600320	●●●○	35	58	600×320	640	360	13
20	FL600450	●●●○	35	58	600×450	640	490	13
21	FL610445	●●●○	35	58	610×445	650	485	13
22	FL640320	●●●○	39	54	640×320	680	360	13
23	FL640530	●●●○	39	54	640×530	680	570	13
24	FL650620	●●●○	39	54	650×620	690	660	13
25	FL750570	●●●○	50	66	750×570	790	610	13
26	FL760660	●●●○	50	66	760×660	800	700	13
27	FL770770	●●●○	50	66	770×770	810	810	13
28	FL850650	●●●○	50	85	850×650	890	690	13
29	FL870670	●●●○	50	85	870×670	910	710	13
30	FL900700	●●●○	54	77	900×700	940	740	13
31	FL920720	●●●○	54	77	920×720	960	760	13

Product Dimensions（mm）

FL5050

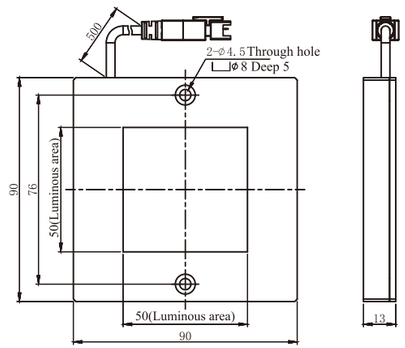

FL6060

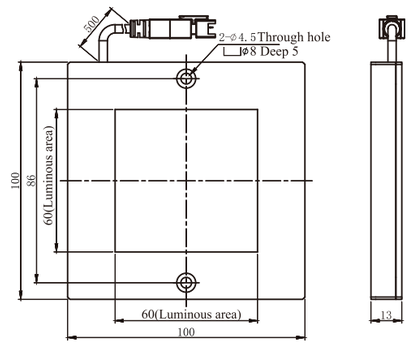

FL8080

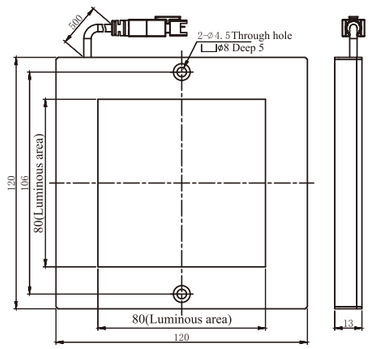

FL9070

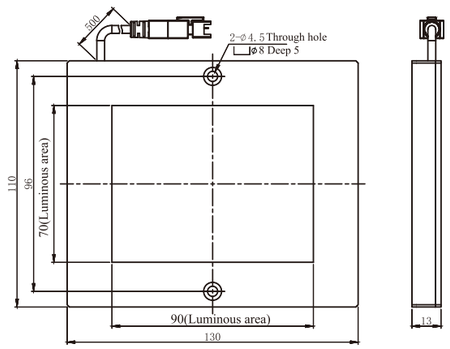

FL11080

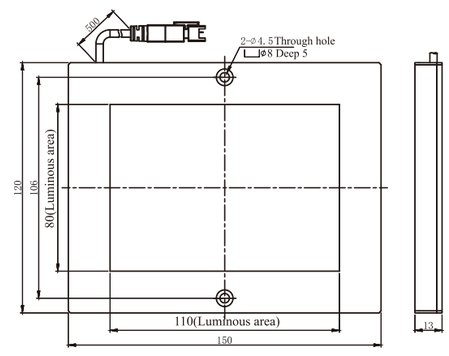

FL100100

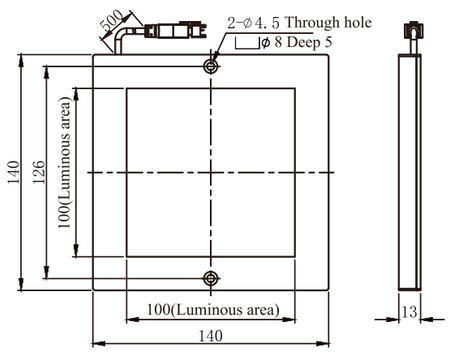

Ring lights P1-11
Bar lights P12-22
Coaxial lights P23-35
Surface lights P36-74
Dome lights P75-77
Shadowless lights P78-88
Point lights P89-90
AOI lights P91-93

FL110100

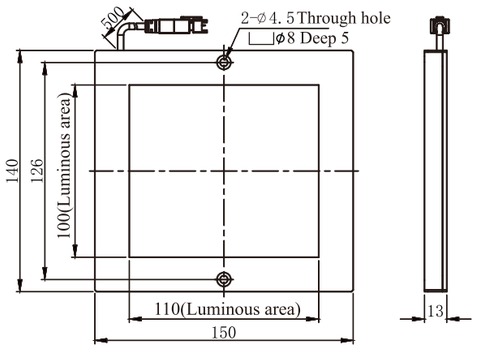

FL110110

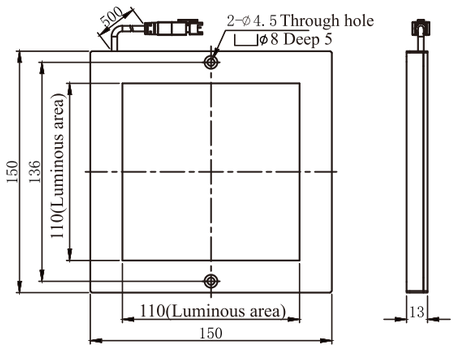

FL120110

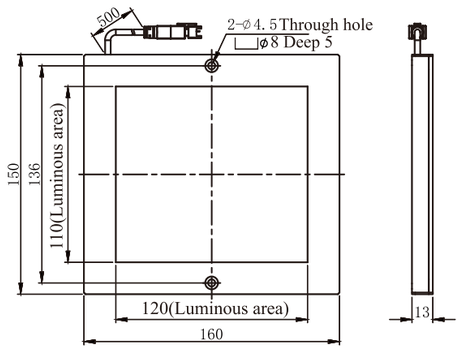

FL150120

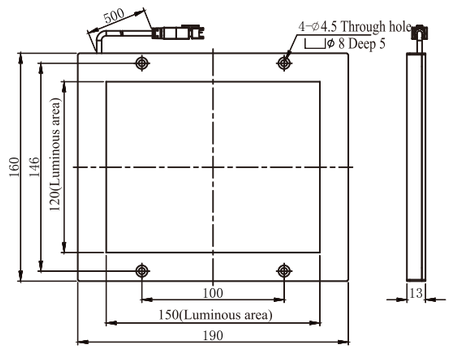

FL290190

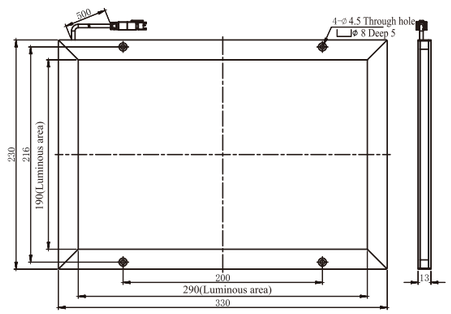

FL380210

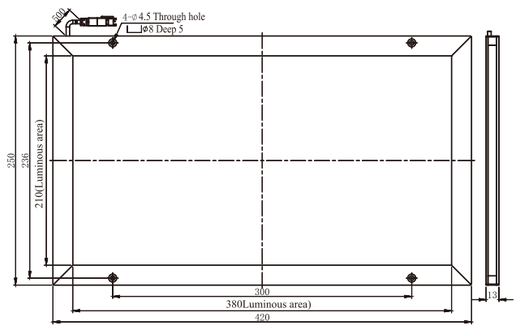

FL390290

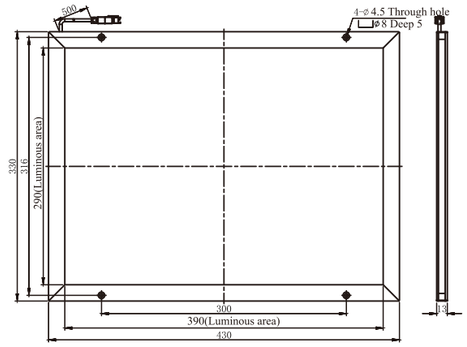

FL460380

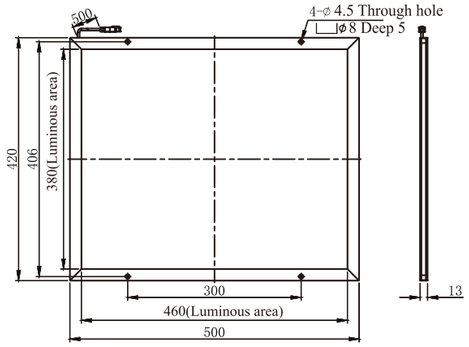

FL570450

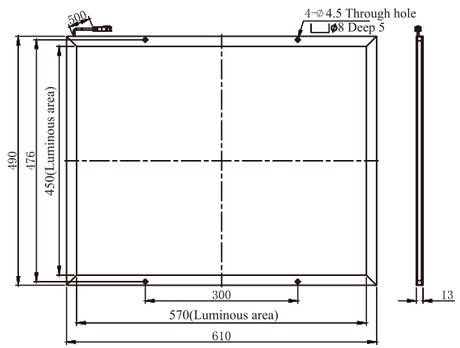

FL570550

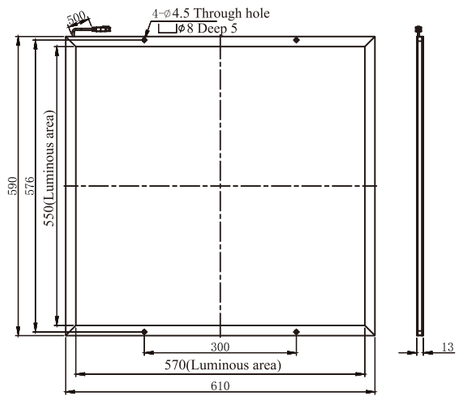

FL590390

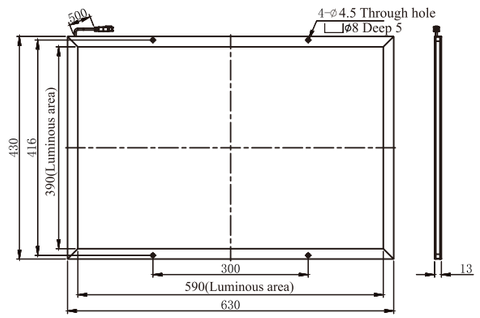

FL590440

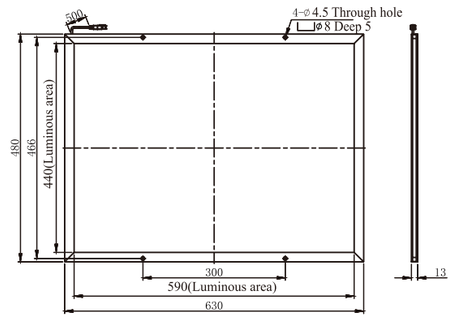

FL600320

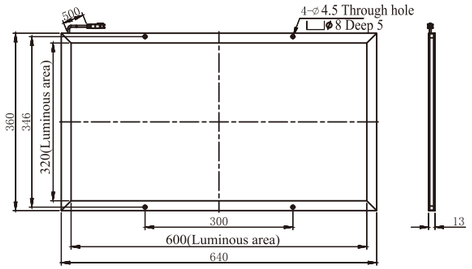

FL600450

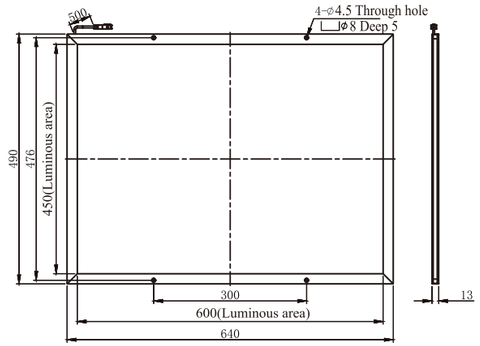

FL610445

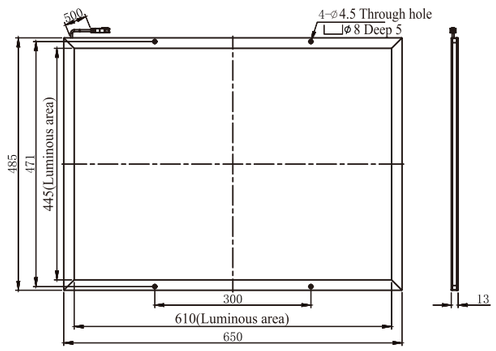

FL640320

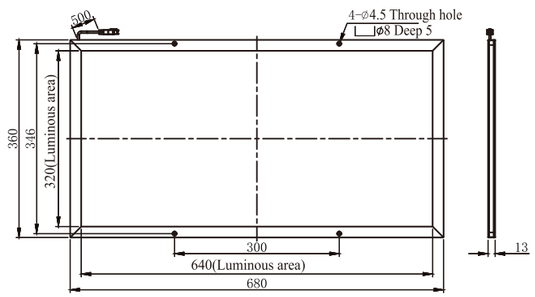

FL640530

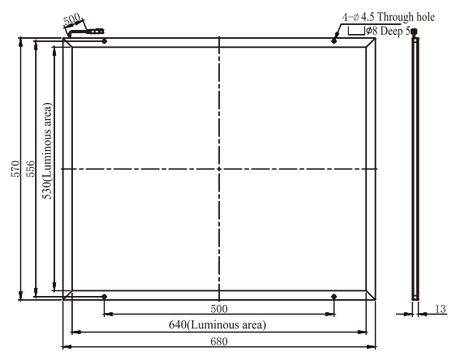

FL650620

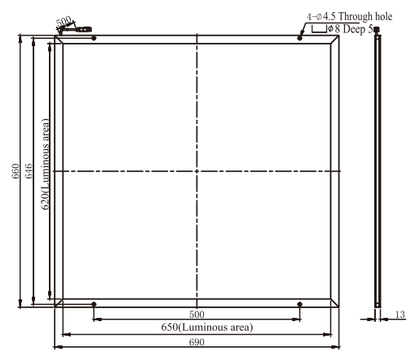

FL770770

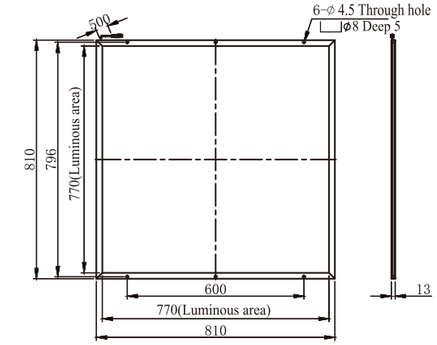

FL850650

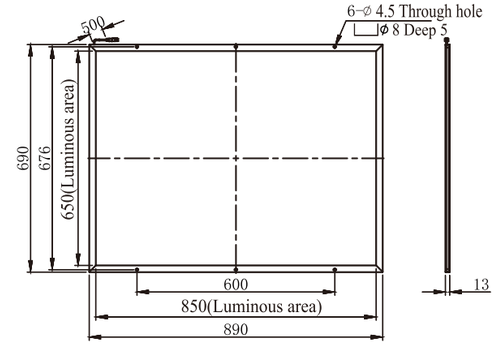

FL870670

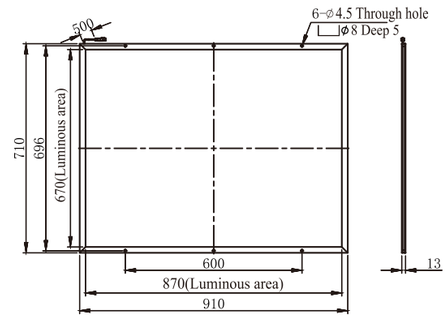

FL900700

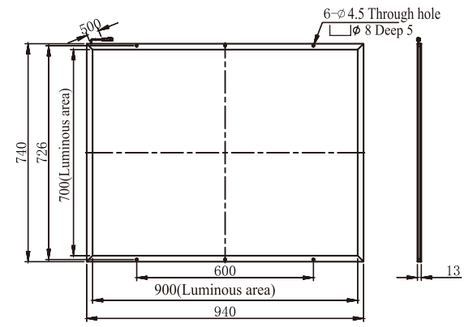

FL750570

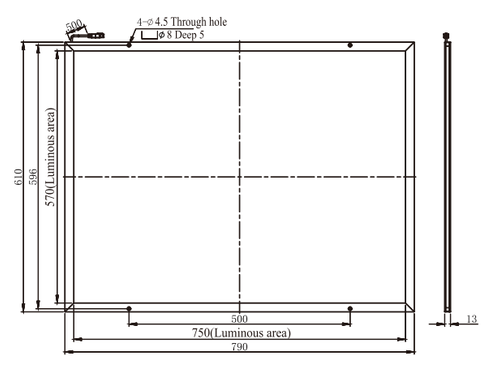

FL760660

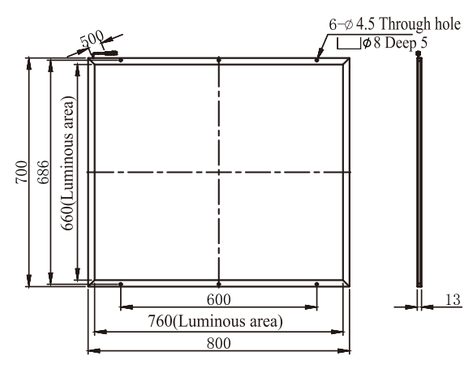

Ring lights P1-11
Bar lights P12-22
Coaxial lights P23-35
Surface lights P36-74
Dome lights P75-77
Shadowless lights P78-88
Point lights P89-90
AOI lights P91-93

FL920720

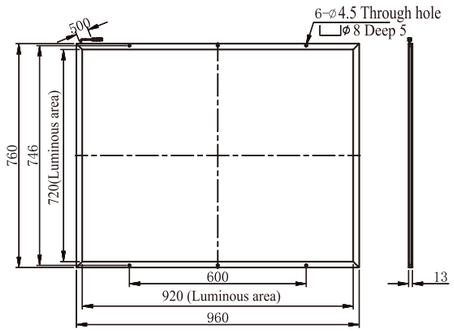

Applications

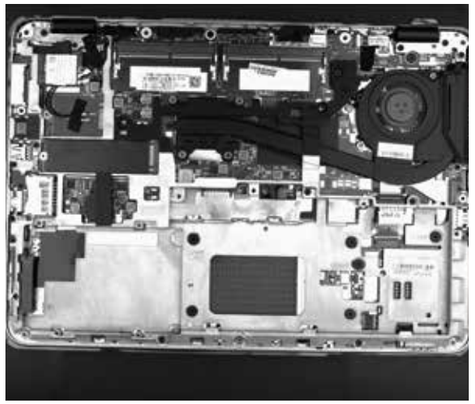

Notebook testing

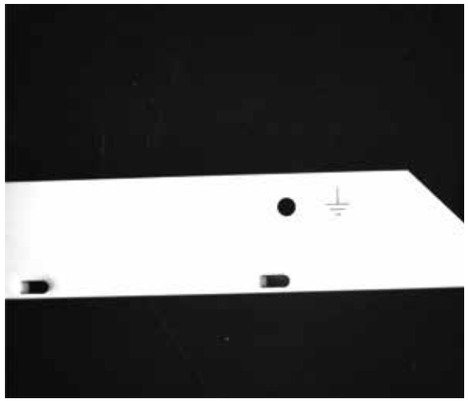

Aluminum hole surface hole position detection

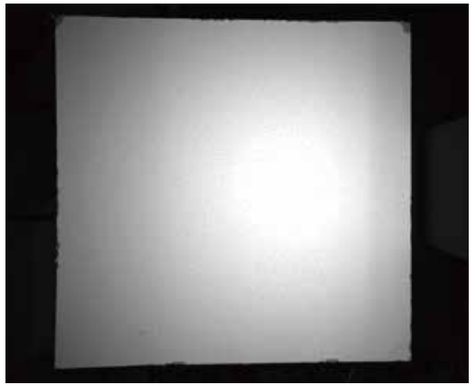

Solar panel chipping detection

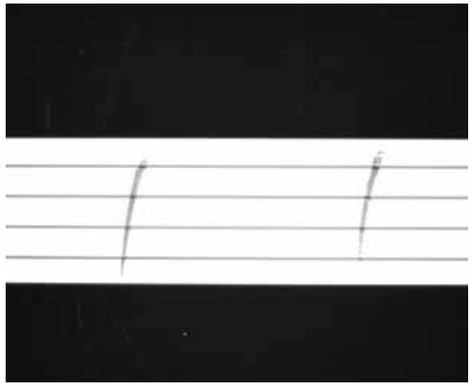

Aluminum defect detection

PFL Series

Parallel surface lights

The high-degree light shot provides better light direction, which is great for high-precision size measurement. It uses first-class optical materials, with flexible size for customer customization in diffferent applications. It has multiple installation methods that are convenient for customers to install and use.

Features

- Multilateral light, overall uniformity 92%-98%.
- Ultra-thin design (6mm), to better suit the needs of different customers.
- Flexible size, can be adjusted according to customer requirements。
- Flexible installation, fixing screws, fixing edges.
- Excellent optical performance, satify strict batch requirements of the lamp beads, and stable performance on continuous boot.
- Frist-class optical materials, built-in collision anti-collision design, to ensure the safety of lamp beads.

Selection instructions

PFL3030-R

- Lights color: R, G, B, W, etc.
- Lights luminous area width, Unit : mm
- Lights luminous area length, Unit:mm
- Parallel surface lights

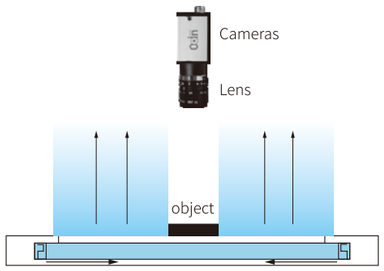

Parallel surface lights

Ring lights P1-11
Bar lights P12-22
Coaxial lights P23-35
Surface lights P36-74
Dome lights P75-77
Shadowless lights P78-88
Point lights P89-90
AOI lights P91-93

Basic product features

Wavelength/ color temperature	Red	620-630nm	Green	520-530nm
	Blue	465-475nm	White	5000-7000k
Save environment	Temperature	-20-60°C	Humidity	20-85%RH(non-condensing)
Use environment		-0-40°C		
Optional accessories	Lights extension line 3/5 meters optional			
Adapter controller	HDT24-70W-4DT、HDT24-150W-4DT Digital light source controller			

Scope of Adaptation

- Camera module detection
- Precision part sizing
- Edge breakage detection
- Scratches on the surface of transparent objects, detection of internal foreign objects
- Liquid high, liquid foreign body detection
- Fiber alignment
- Glass container inspection

Parameter table

No.	Model	Color	Power（W）		Luminous surface size	Dimensions（mm）		
			R	G/B/W		Long	Width	High
1	PFL3030	●●●○	0.8	1.5	30×30	47	40	22.5
2	PFL4040	●●●○	1.3	2.1	40×40	57	50	22.5
3	PFL5050	●●●○	3	3	50×50	74	60	22.5
4	PFL6060	●●●○	3.8	5.1	60×60	84	70	22.5
5	PFL7070	●●●○	3.8	6.3	70×70	94	80	22.5
6	PFL8080	●●●○	5.5	7.6	80×80	104	90	22.5
7	PFL9090	●●●○	6.6	8.4	90×90	114	100	22.5
8	PFL100100	●●●○	8.9	11	100×100	124	110	22.5
9	PFL120120	●●●○	11	12	120×120	144	130	22.5
10	PFL150100	●●●○	8.2	14	150×100	174	110	22.5
11	PFL150150	●●●○	16	19	150×150	174	160	22.5
12	PFL200150	●●●○	17	25	200×150	224	160	22.5
13	PFL200200	●●●○	23	33	200×200	224	210	22.5
14	PFL250200	●●●○	26	44	250×200	264	214	22
15	PFL250250	●●●○	33	54	250×250	264	264	22
16	PFL300200	●●●○	35	52	300×200	314	214	22
17	PFL300250	●●●○	44	65	300×250	314	264	22
18	PFL300300	●●●○	52	78	300×300	314	314	22
19	PFL350300	●●●○	61	91	350×300	364	314	22
20	PFL350350	●●●○	71	106	350×350	364	364	22
21	PFL400250	●●●○	58	87	400×250	414	264	25.5
22	PFL400300	●●●○	70	104	400×300	414	314	25.5
23	PFL400350	●●●○	81	121	400×350	414	364	25.5
24	PFL400400	●●●○	93	139	400×400	414	414	25.5
25	PFL450250	●●●○	65	98	450×250	464	264	25.5
26	PFL450350	●●●○	91	137	450×350	464	364	25.5
27	PFL500250	●●●○	72	108	500×250	514	264	25.5
28	PFL500300	●●●○	87	130	500×300	514	314	25.5

Product Dimensions（mm）

PFL3030

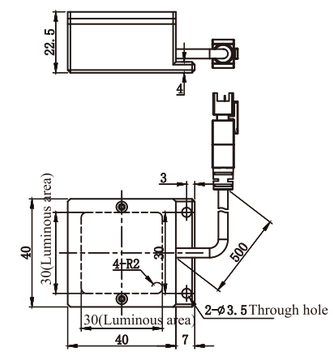

PFL4040

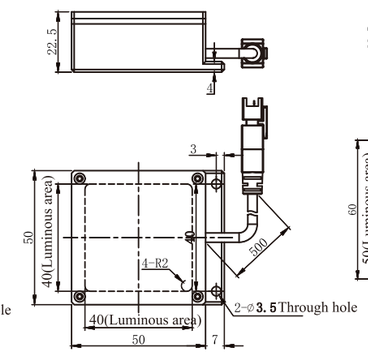

PFL5050

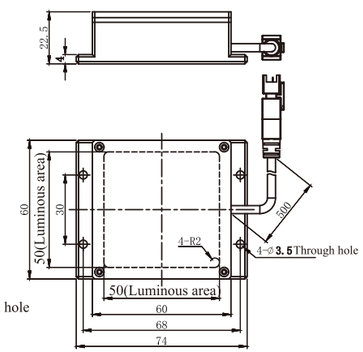

PFL6060

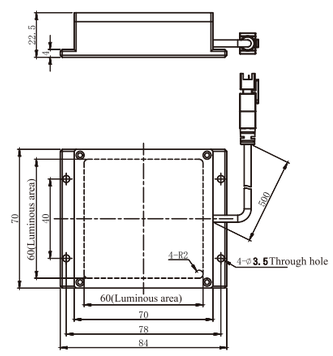

PFL7070

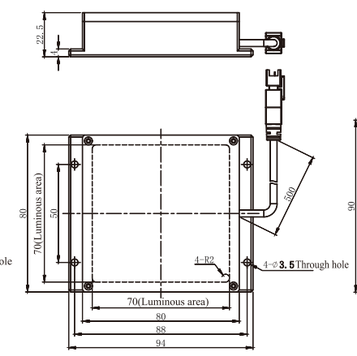

PFL8080

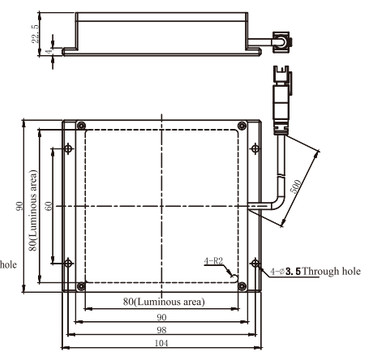

PFL9090

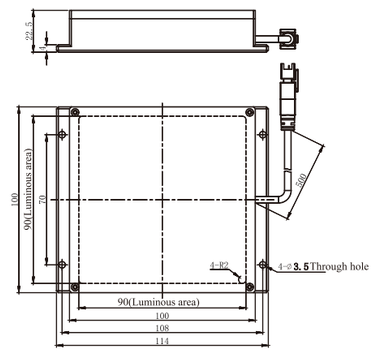

PFL100100

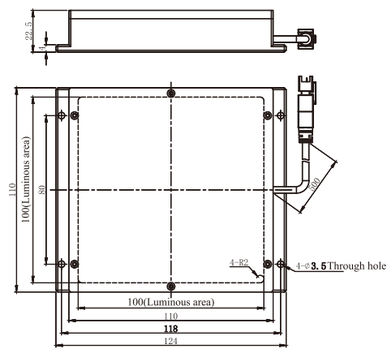

Ring lights P1-11
Bar lights P12-22
Coaxial lights P23-35
Surface lights P36-74
Dome lights P75-77
Shadowless lights P78-88
Point lights P89-90
AOI lights P91-93

PFL120120

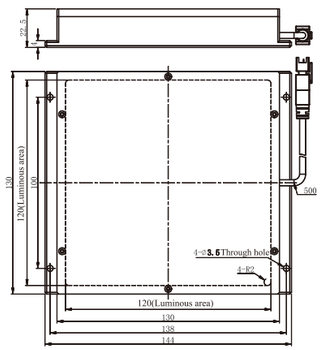

PFL150100

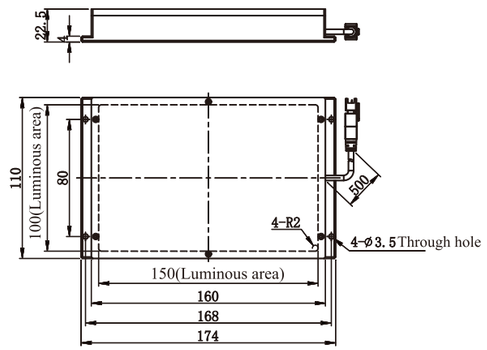

PFL150150

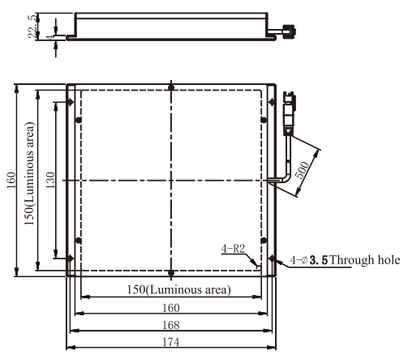

PFL200150

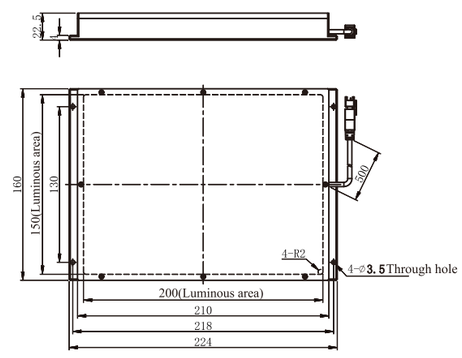

PFL200200

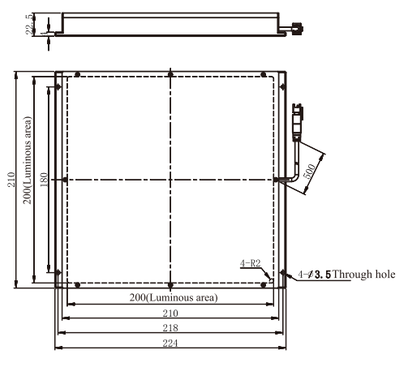

PFL250200

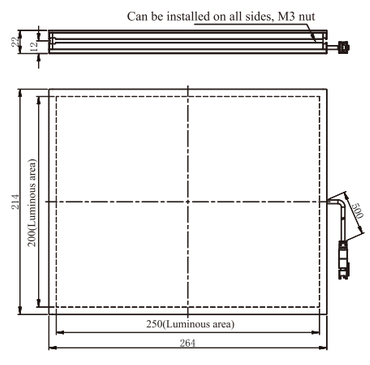

PFL250250

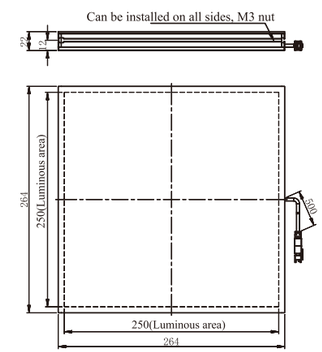

PFL300200

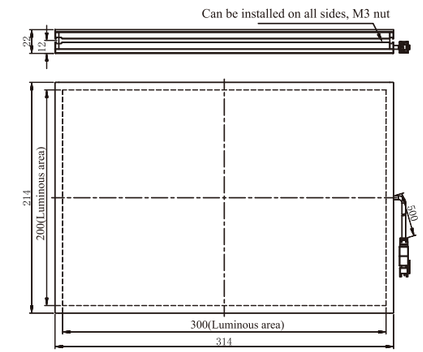

PFL300250

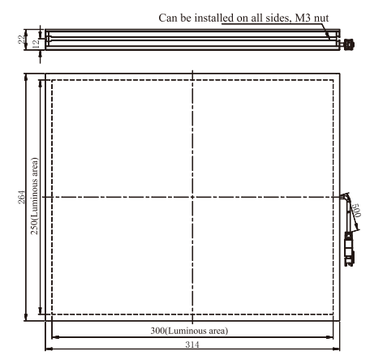

PFL300300

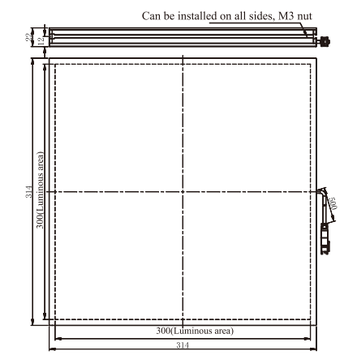

PFL350300

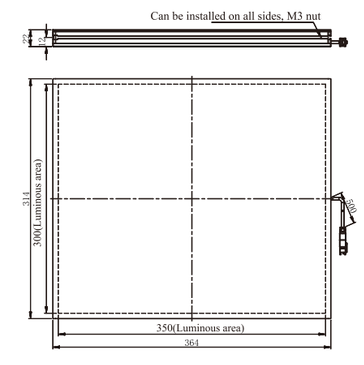

PFL350350

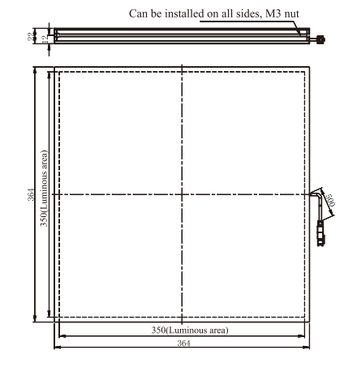

PFL400250

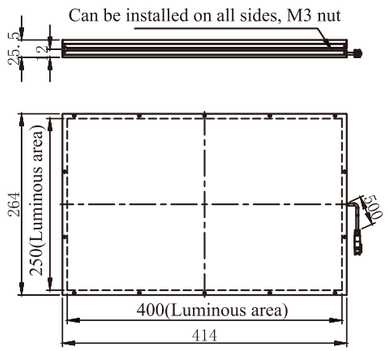

PFL400300

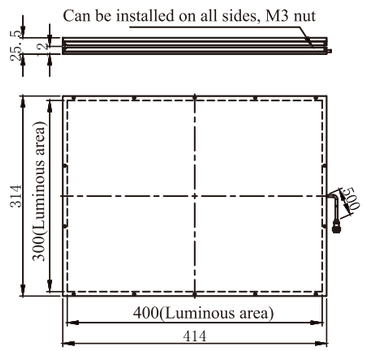

PFL400350

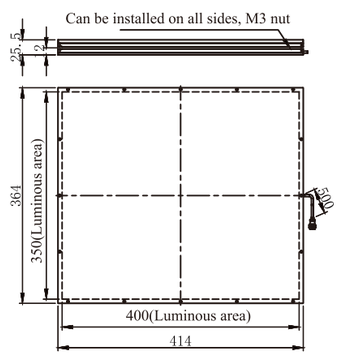

PFL400400

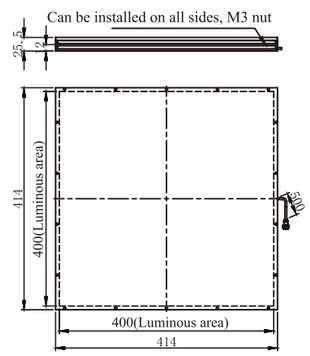

PFL450250

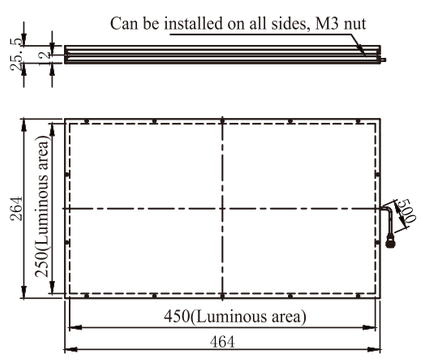

PFL450350

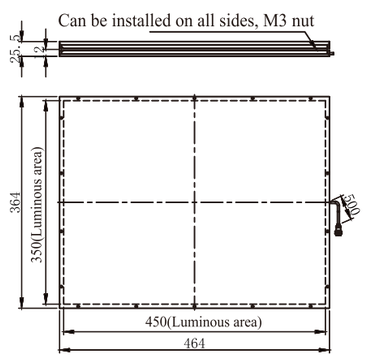

PFL500250

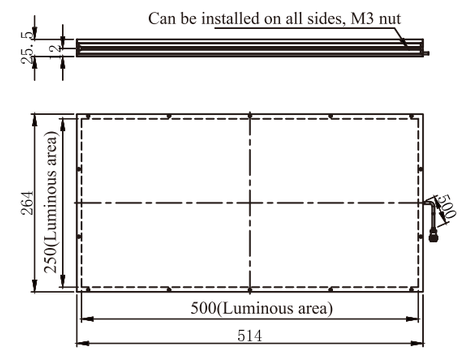

PFL500300

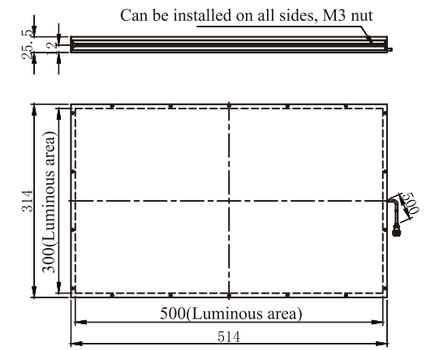

Applications

Coin cell battery size detection

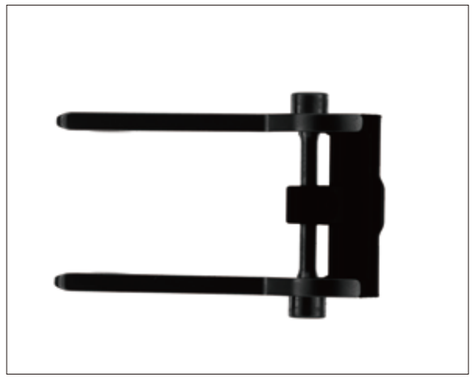

Plug size measurement

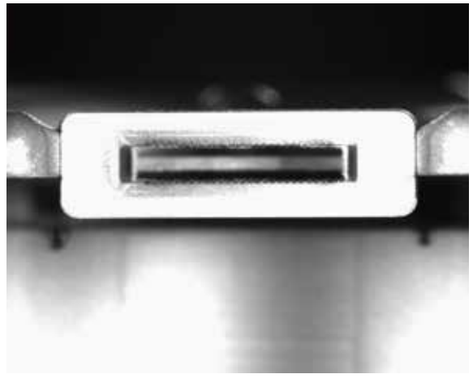

USB port cutting and positioning

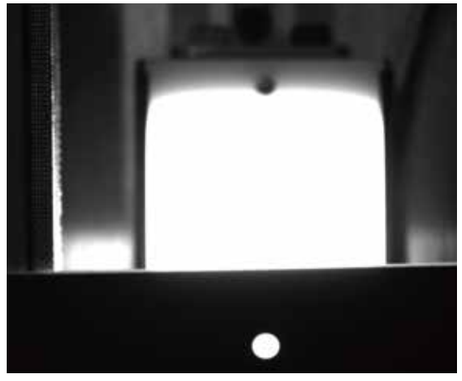

Cell phone glass cover round hole inspection

Ring lights P1-11
Bar lights P12-22
Coaxial lights P23-35
Surface lights P36-74
Dome lights P75-77
Shadowless lights P78-88
Point lights P89-90
AOI lights P91-93

FLB Series

Bottom luminous surface lights

Features

- The bottom of the high-density LED is evenly arranged
- High uniformity, soft and natural light, high brightness adjustment
- Flexible size, convenient for customer customization, wide range of applications
- A variety of installation methods to facilitate customer installation

Selection instructions

FLB100100-R

- Lights color: R, G, B, W, etc.
- Lights luminous area width, Unit : mm
- Lights luminous area length, Unit:mm
- Bottom luminous surface lights

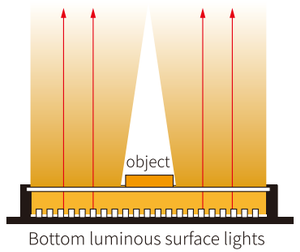

Bottom luminous surface lights

Basic product features

Wavelength/ color temperature	Red	620-630nm	Green	520-530nm
	Blue	465-475nm	White	5000-7000k
Save environment	Temperature	-20-60˚C	Humidity	20-85%RH(non-condensing)
Use environment		-0-40˚C		
Optional accessories	Lights extension line 3/5 meters optional			
Adapter controller	HDT24-70W-4DT、HDT24-150W-4DT Digital light source controller			

Scope of Adaptation

- High -precision size measurement
- Detection of objects on metal surfaces
- Detection of metal surface glue
- Glass container detection
- Internal body detection
- Spring spacing measurement
- Camera module detection
- Edge damage detection
- Screen positioning fit
- Object surface scratch
- Fiber alignment
- Whether to detect

Parameter table

No.	Model	Color	Power（W）		Luminous surface size	Dimensions（mm）		
			R	G/B/W		Long	Width	High
1	FLB3030	●●●○	0.8	1.5	30×30	47	40	20
2	FLB4040	●●●○	1.3	2.1	40×40	57	50	20
3	FLB5050	●●●○	3	3	50×50	74	60	20
4	FLB6060	●●●○	3.8	5.1	60×60	84	70	20
5	FLB7070	●●●○	3.8	6.3	70×70	94	80	20
6	FLB8080	●●●○	5.5	7.6	80×80	104	90	20
7	FLB9090	●●●○	6.6	8.4	90×90	114	100	20
8	FLB100100	●●●○	8.9	11	100×100	124	110	20
9	FLB120120	●●●○	11	12	120×120	144	130	20
10	FLB150100	●●●○	8.2	14	150×100	174	110	20
11	FLB150150	●●●○	16	19	150×150	174	160	20
12	FLB200150	●●●○	17	25	200×150	224	160	20
13	FLB200200	●●●○	23	33	200×200	224	210	20
14	FLB250200	●●●○	26	44	250×200	264	214	20
15	FLB250250	●●●○	33	54	250×250	264	264	20
16	FLB300200	●●●○	35	52	300×200	314	214	20
17	FLB300250	●●●○	44	65	300×250	314	264	20
18	FLB300300	●●●○	52	78	300×300	314	314	20
19	FLB350300	●●●○	61	91	350×300	364	314	20
20	FLB350350	●●●○	71	106	350×350	364	364	20
21	FLB400250	●●●○	58	87	400×250	414	264	23
22	FLB400300	●●●○	70	104	400×300	414	314	23
23	FLB400350	●●●○	81	121	400×350	414	364	23
24	FLB400400	●●●○	93	139	400×400	414	414	23
25	FLB450250	●●●○	65	98	450×250	464	264	23
26	FLB450350	●●●○	91	137	450×350	464	364	23
27	FLB450450	●●●○	36	54	450×450	464	464	40
28	FLB500250	●●●○	72	108	500×250	514	264	23
29	FLB500300	●●●○	87	130	500×300	514	314	23
30	FLB500350	●●●○	101	152	500×350	514	364	23
31	FLB500400	●●●○	38	49	500×400	514	414	40
32	FLB500450	●●●○	41	58	500×450	514	464	40
33	FLB500500	●●●○	44	63	500×500	514	514	40
34	FLB600300	●●●○	29	46	600×300	614	314	40
35	FLB600400	●●●○	39	65	600×400	614	414	40
36	FLB600600	●●●○	71	91	600×600	614	614	40
37	FLB700700	●●●○	81	124	700×700	714	714	41
38	FLB800800	●●●○	117	162	800×800	814	814	41
39	FLB900500	●●●○	74	123	900×500	914	514	41
40	FLB900700	●●●○	102	167	900×700	914	714	41
41	FLB1200600	●●●○	130	216	1200×600	1214	614	41
42	FLB1200800	●●●○	173	288	1200×800	1250	850	50
43	FLB16001200	●●●○	346	576	1600×1200	1690	1290	50

Product Dimensions (mm)

FLB3030

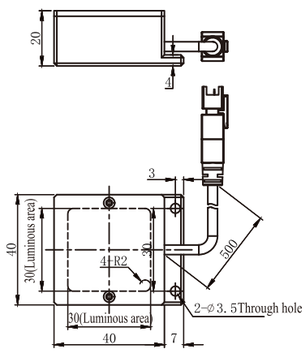

FLB4040

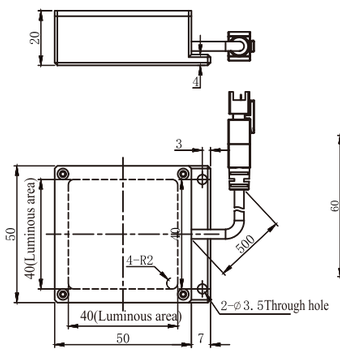

FLB5050

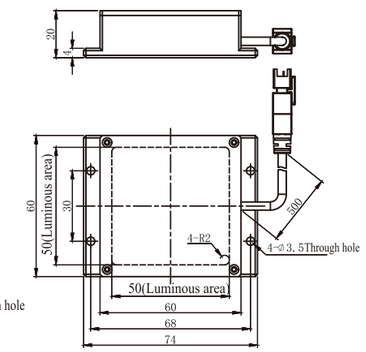

FLB6060

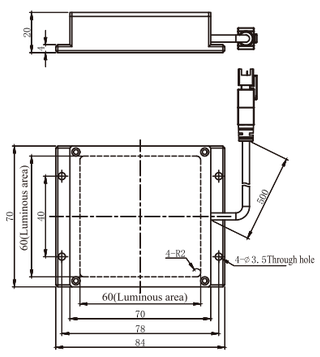

FLB7070

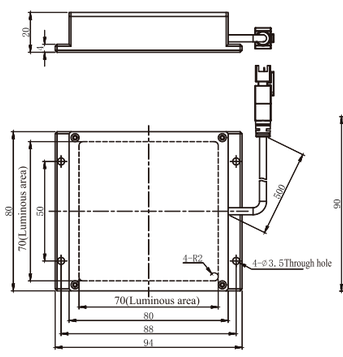

FLB8080

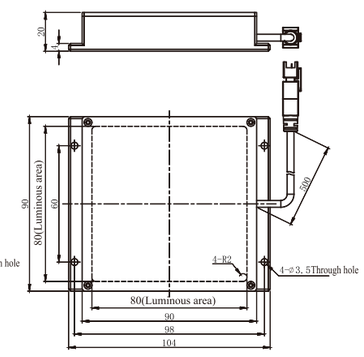

FLB9090

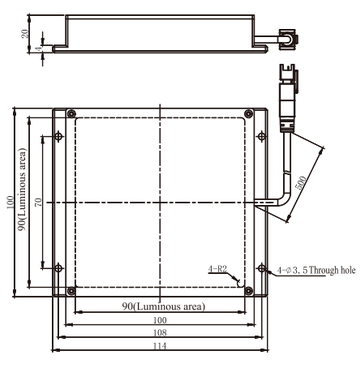

FLB100100

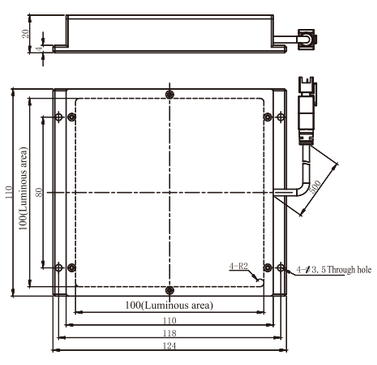

FLB120120

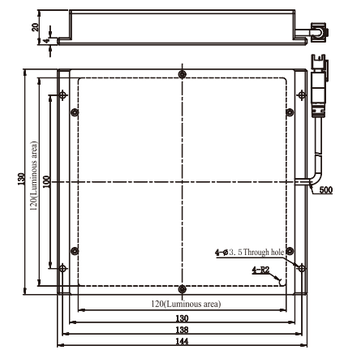

FLB150100

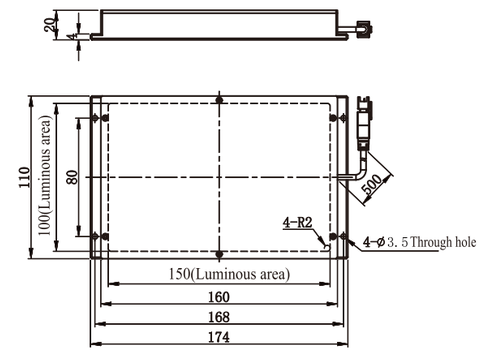

FLB150150

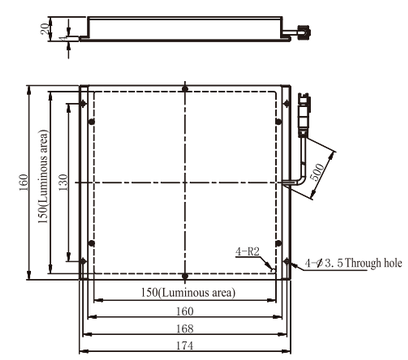

FLB200150

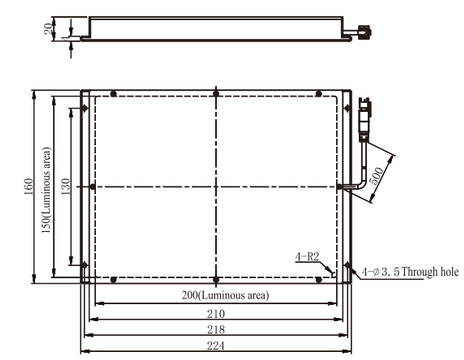

FLB200200

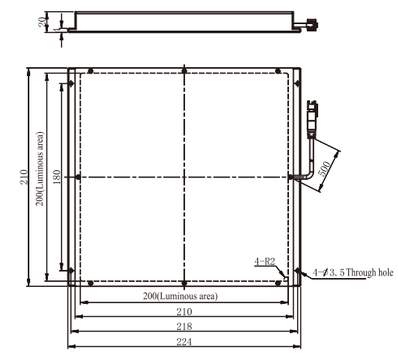

FLB250200

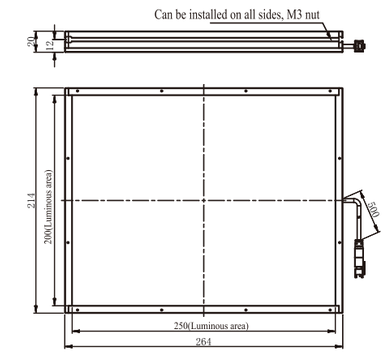

Ring lights P1-11
Bar lights P12-22
Coaxial lights P23-35
Surface lights P36-74
Dome lights P75-77
Shadowless lights P78-88
Point lights P89-90
AOI lights P91-93

FLB250250

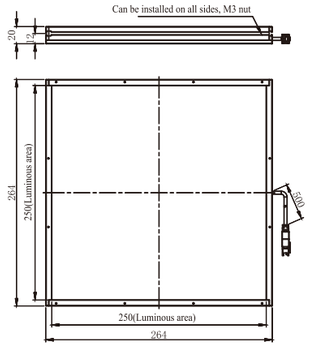

FLB300200

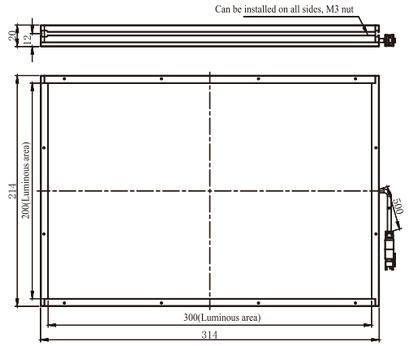

FLB400250

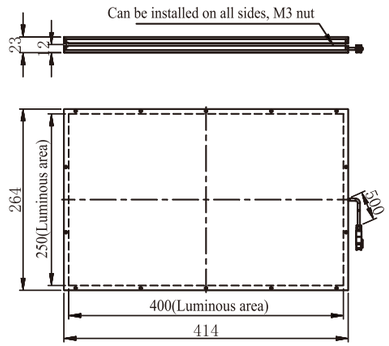

FLB400300

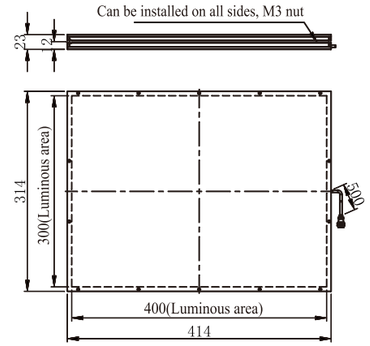

FLB300250

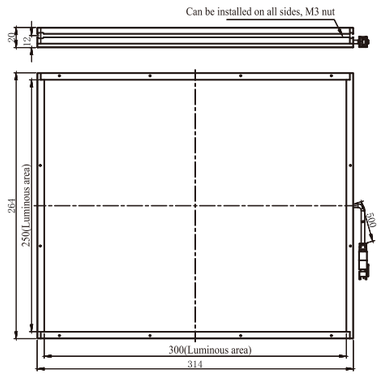

FLB300300

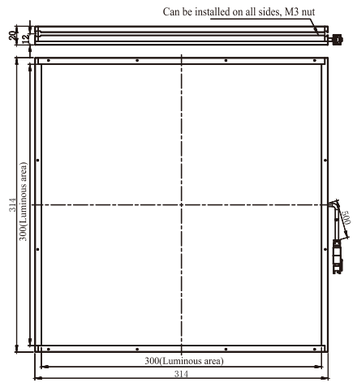

FLB400350

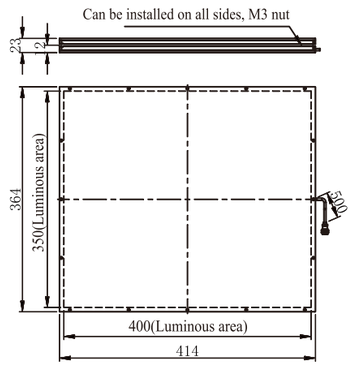

FLB400400

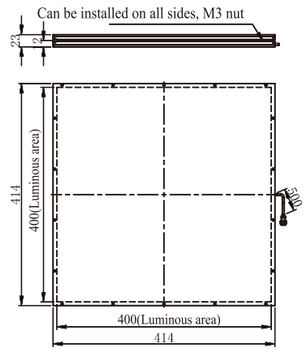

FLB350300

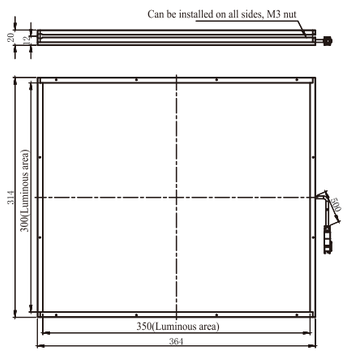

FLB350350

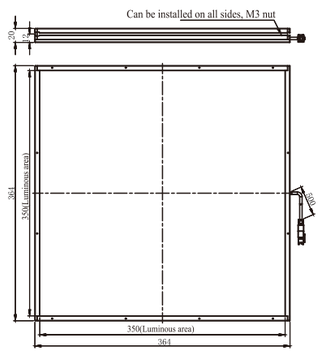

FLB450250

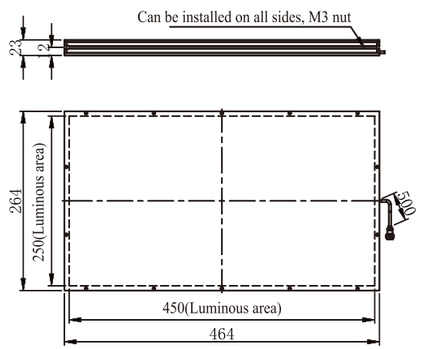

FLB450350

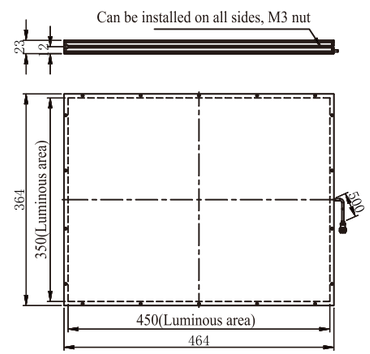

FLB450450

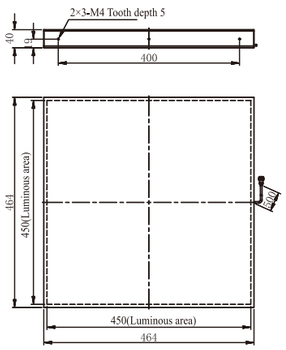

FLB500250

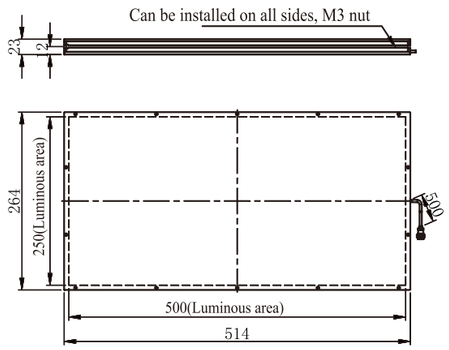

FLB500300

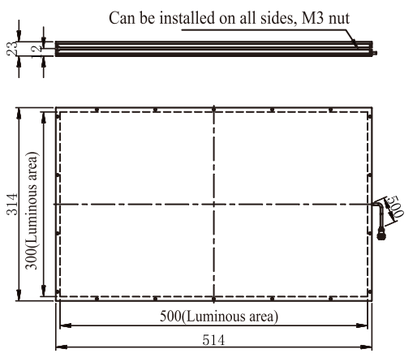

FLB500350

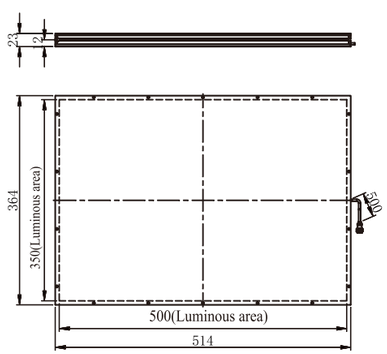

FLB500400

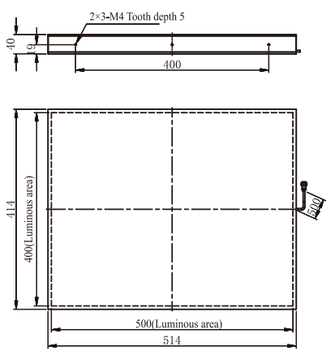

FLB500450

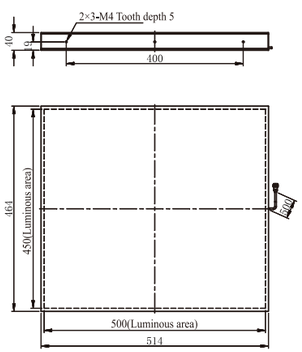

FLB500500

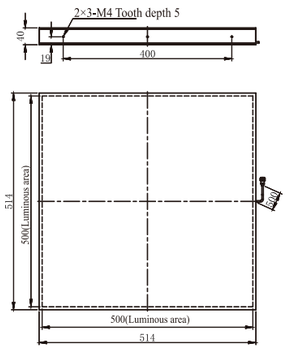

FLB600300

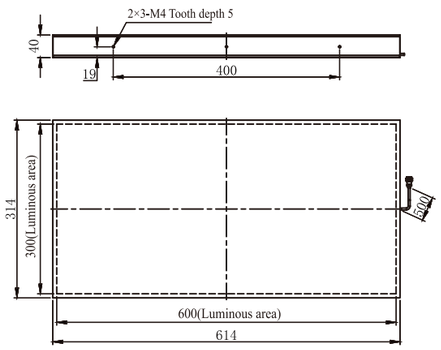

FLB600400

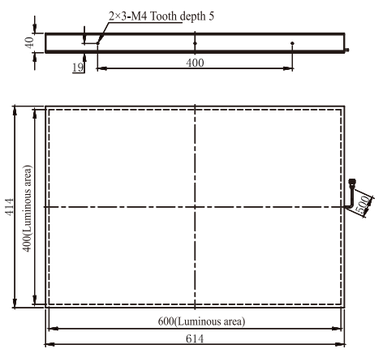

FLB600600

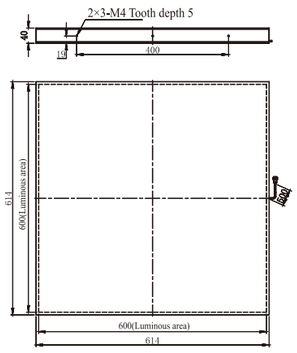

FLB700700

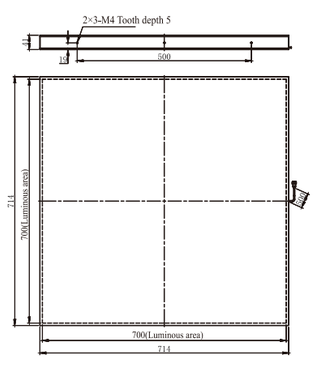

FLB800800

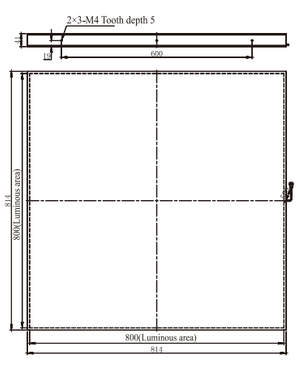

Ring lights P1-11
Bar lights P12-22
Coaxial lights P23-35
Surface lights P36-74
Dome lights P75-77
Shadowless lights P78-88
Point lights P89-90
AOI lights P91-93

FLB900500

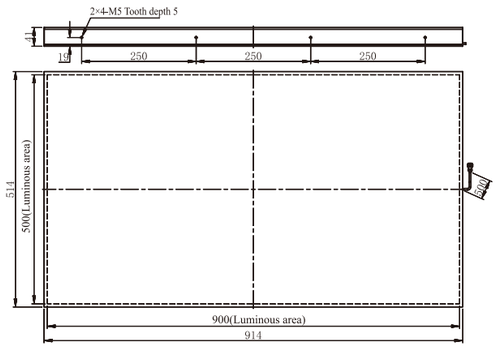

FLB900700

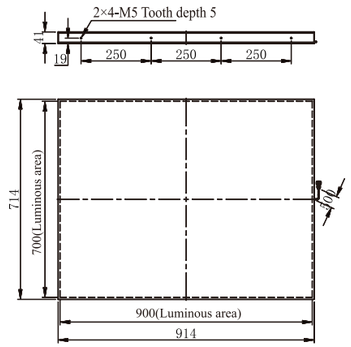

FLB1200600

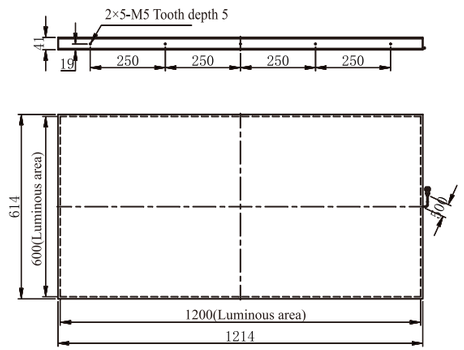

FLB1200800
FLB16001200
On-demand

Applications

Circuit Board Inspection

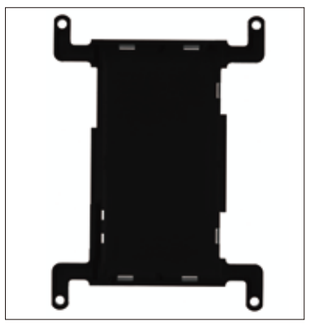

Component dimensional inspection

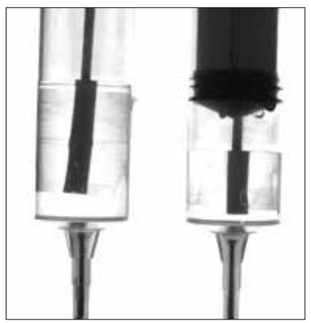

Syringe level position detection

FLO Series

Side luminous opening surface lights

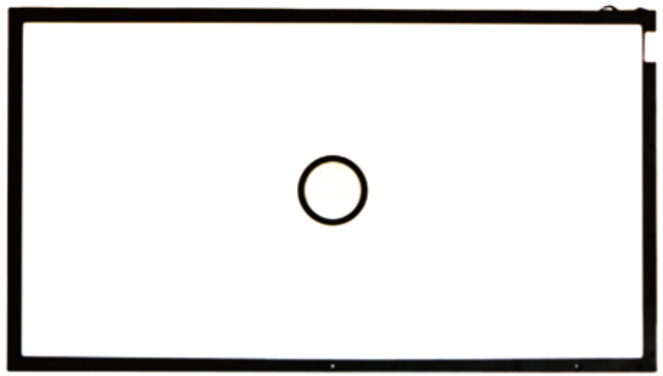

In this type of light, round holes or square holes are opened on the basis of standard side surface light. It is generally used for forward lighting. It offers side light, has small size, high performance, is produced by special light guide material. Its size is flexible and changeable, which is convenient for customization and supporting a wide range of applications. A variety of installation methods are available to facilitate customer installation.

Features

- High-density LEDs are evenly arranged at the bottom
- High uniformity, soft and natural light, high brightness adjustment
- The size is flexible, convenient to customize, and has a wide range of applications
- Square and round holes can be opened from above
- A variety of installation methods, convenient for customers to install

Selection instructions

FLO100100Y50-R

- Lights color: R, G, B, W, etc.
- Round hole diameter,Unit:mm
- Round hole
- Lights luminous area width, Unit : mm
- Lights luminous area length, Unit:mm
- Side luminous opening surface lights

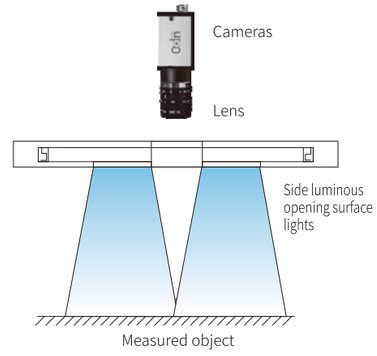

Ring lights P1-11
Bar lights P12-22
Coaxial lights P23-35
Surface lights P36-74
Dome lights P75-77
Shadowless lights P78-88
Point lights P89-90
AOI lights P91-93

Basic product features

Wavelength/ color temperature	Red	620-630nm	Green	520-530nm
	Blue	465-475nm	White	5000-7000k
Save environment	Temperature	-20-60˚C	Humidity	20-85%RH(non-condensing)
Use environment		-0-40˚C		
Optional accessories	Lights extension line 3/5 meters optional			
Adapter controller	HDT24-70W-4DT、HDT24-150W-4DT Digital light source controller			

Scope of Adaptation

- Large-format product positioning identification
- Parts, hardware defect detection
- Porcelain tile surface pattern detection
- Remote control button character recognition
- External contour edge positioning detection
- Pill appearance detection
- Compressor surface defects detection
- LED substrate presence or absence detection

Parameter table

No.	Model	Color	Power（W）		Luminous surface size	Dimensions（mm）		
			R	G/B/W		Long	Width	High
1	FLO100100Y50	●●●○	7.7	12	100×100	140	140	13
2	FLO110100Y50	●●●○	7.7	12	110×100	150	140	13
3	FLO110110Y50	●●●○	7.7	12	110×110	150	150	13
4	FLO120110Y50	●●●○	7.7	12	120×110	160	150	13
5	FLO150120Y50	●●●○	12	16	150×120	190	160	13
6	FLO290190Y50	●●●○	20	27	290×190	330	230	13
7	FLO380210Y50	●●●○	24	35	380×210	420	250	13
8	FLO390290Y50	●●●○	24	35	390×290	430	330	13
9	FLO460380Y50	●●●○	27	47	460×380	500	420	13
10	FLO570450Y50	●●●○	35	58	570×450	610	490	13
11	FLO570550Y50	●●●○	35	58	570×550	610	590	13
12	FLO590390Y50	●●●○	35	58	590×390	630	430	13
13	FLO590440Y50	●●●○	35	58	590×440	630	480	13
14	FLO600320Y50	●●●○	35	58	600×320	640	360	13
15	FLO600450Y50	●●●○	35	58	600×450	640	490	13
16	FLO610445Y50	●●●○	35	58	610×445	650	485	13
17	FLO640320Y50	●●●○	39	54	640×320	680	360	13
18	FLO640530Y50	●●●○	39	54	640×530	680	570	13
19	FLO650620Y50	●●●○	39	54	650×620	690	660	13
20	FLO750570Y50	●●●○	50	66	750×570	790	610	13
21	FLO760660Y50	●●●○	50	66	760×660	800	700	13
22	FLO770770Y50	●●●○	50	66	770×770	810	810	13
23	FLO850650Y50	●●●○	50	85	850×650	890	690	13
24	FLO870670Y50	●●●○	50	85	870×670	910	710	13
25	FLO900700Y50	●●●○	54	77	900×700	940	740	13
26	FLO920720Y50	●●●○	54	77	920×720	960	760	13

Product Dimensions（mm）

FLO100100Y50

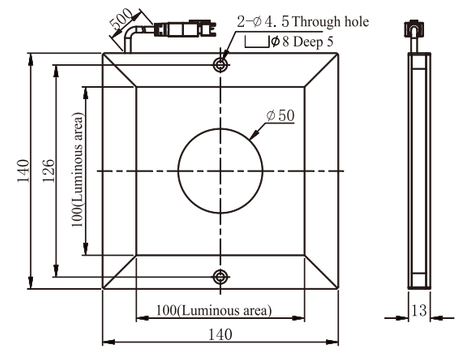

FLO110100Y50

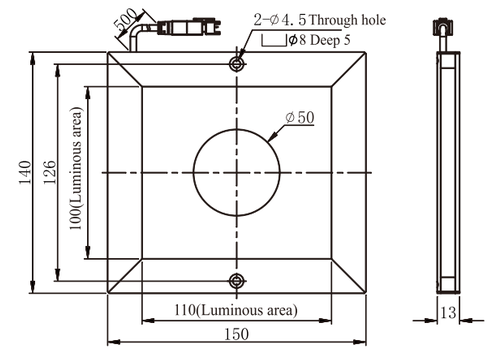

FLO110110Y50

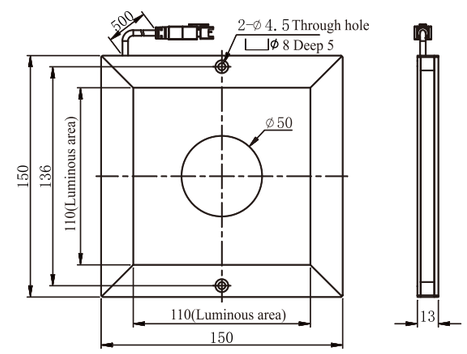

FLO120110Y50

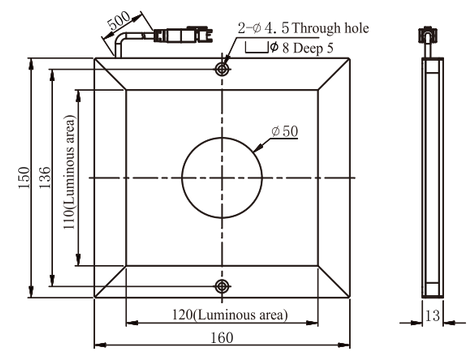

FLO150120Y50

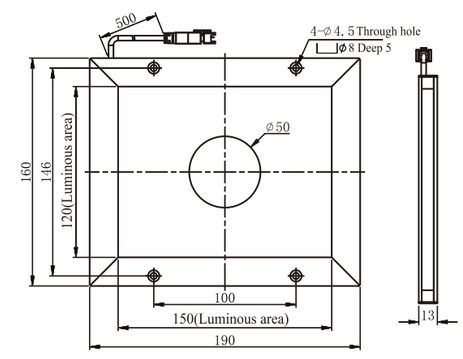

FLO290190Y50

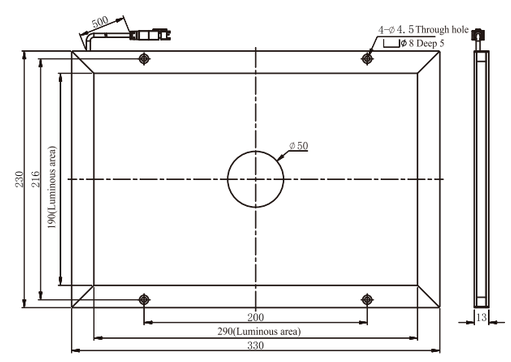

Ring lights P1-11
Bar lights P12-22
Coaxial lights P23-35
Surface lights P36-74
Dome lights P75-77
Shadowless lights P78-88
Point lights P89-90
AOI lights P91-93

FLO380210Y50

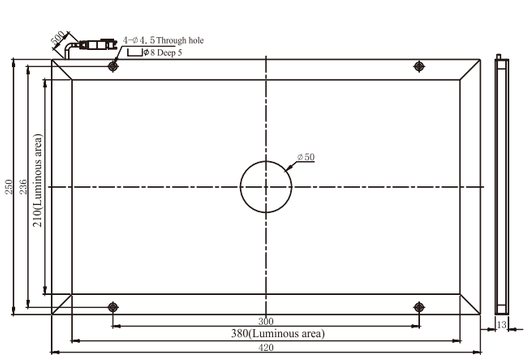

FLO390290Y50

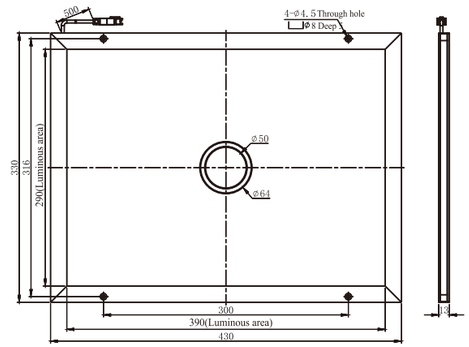

FLO460380Y50

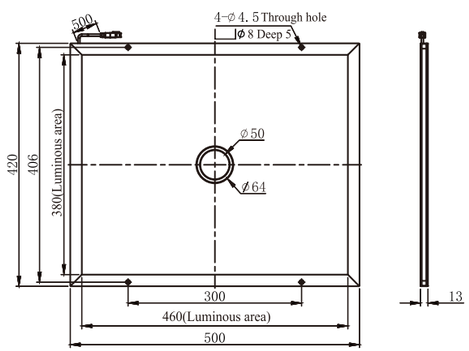

FLO570450Y50

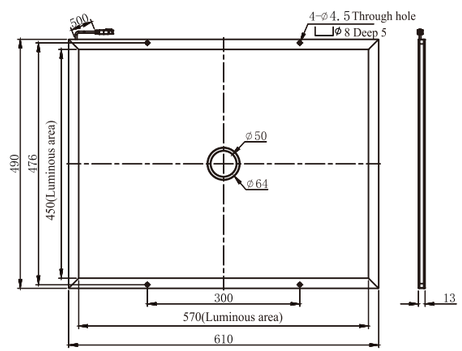

FLO570550Y50

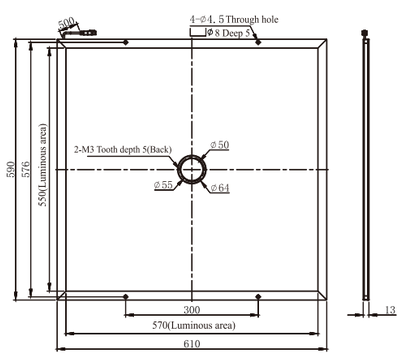

FLO590390Y50

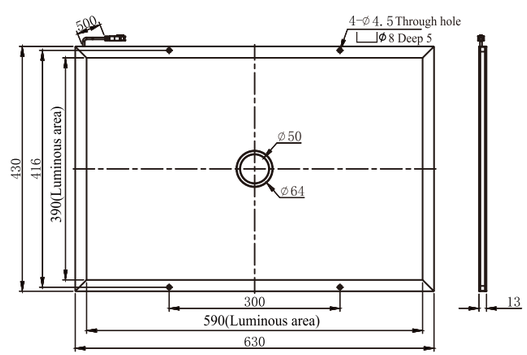

FLO590440Y50

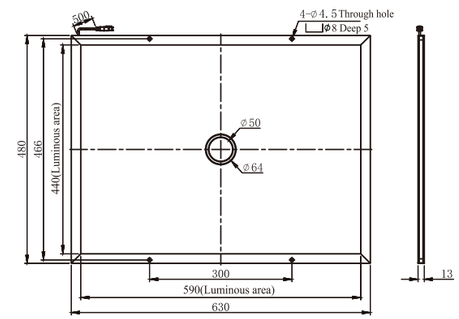

FLO600320Y50

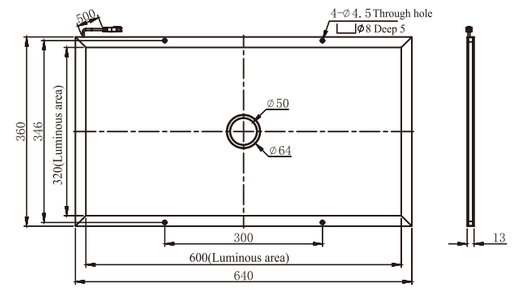

FLO600450Y50

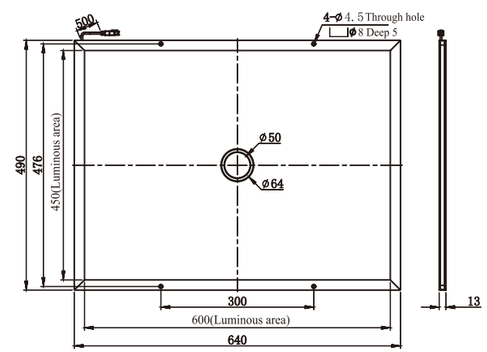

FLO610445Y50

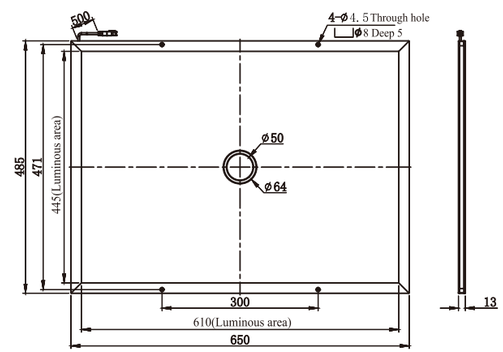

FLO640320Y50

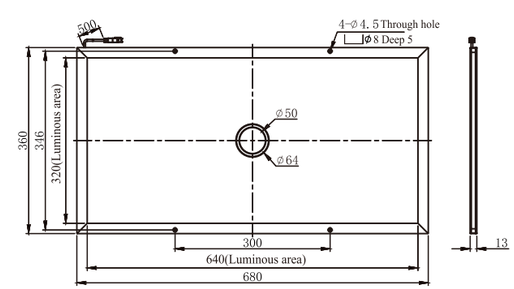

FLO640530Y50

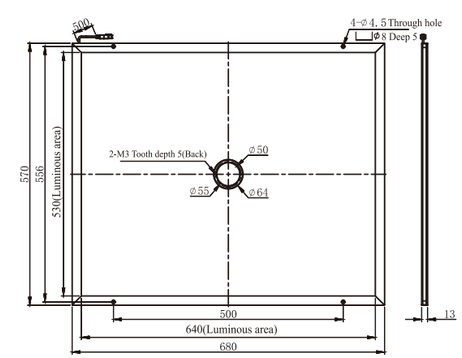

FLO650620Y50

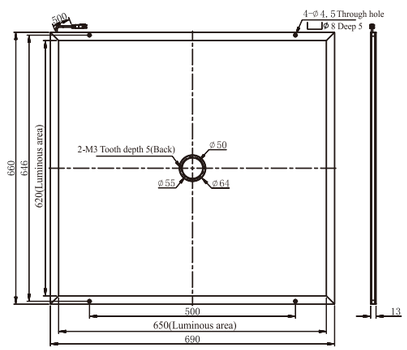

FLO750570Y50

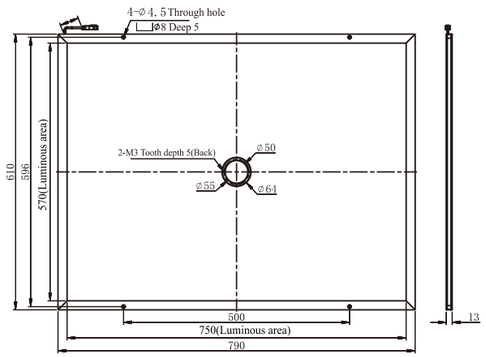

FLO760660Y50

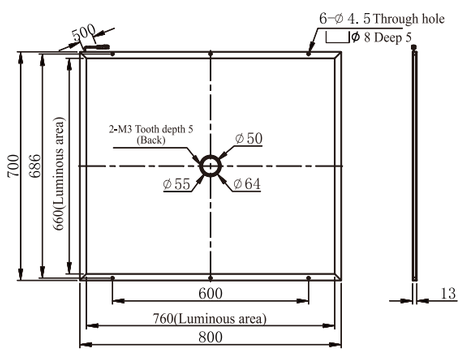

FLO770770Y50

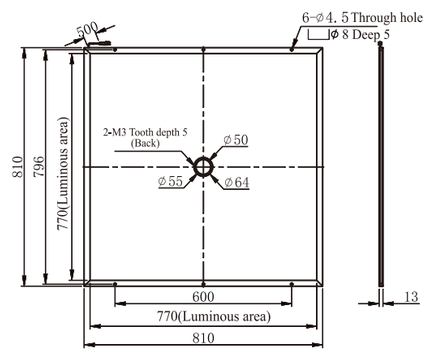

FLO850650Y50

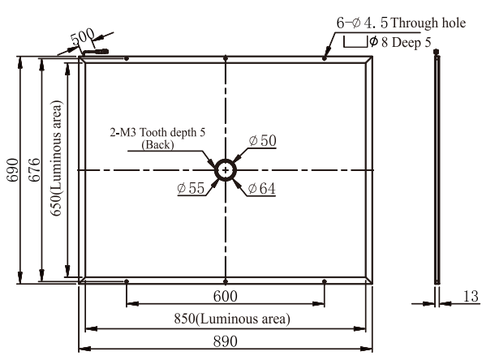

FLO870670Y50

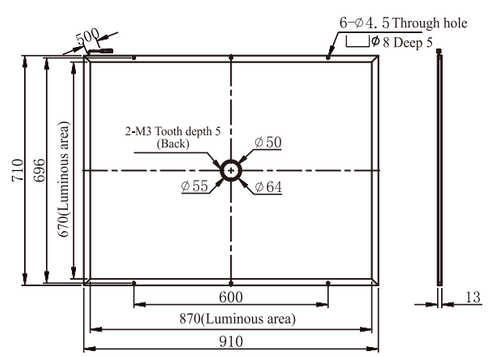

FLO900700Y50

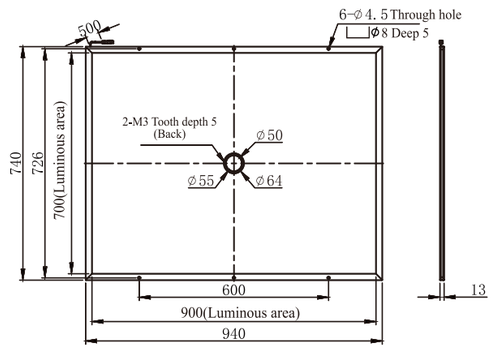

FLO920720Y50

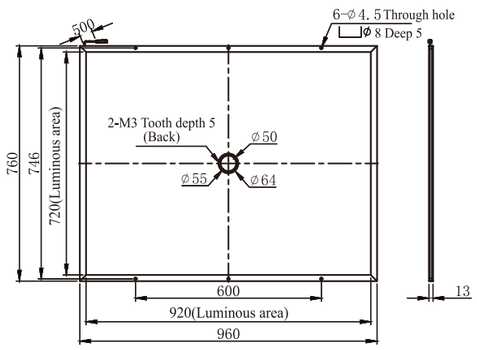

Applications

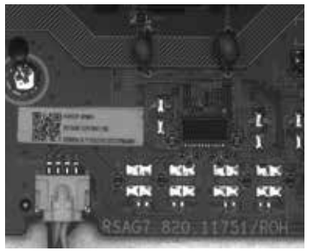

TV detection lineup, QR code, character

TV screw holes

Character detection

Automotive Wheel Inspection

Courier logistics barcode identification reading

Hardware parts-positive and negative positioning inspection

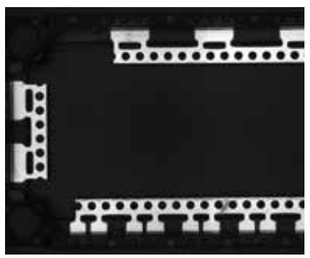

Exposed copper scratch detection

Infusion bag date detection

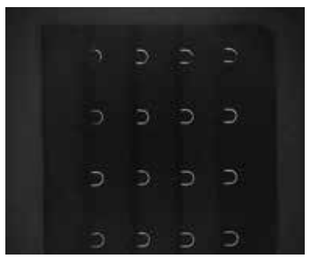

Lingerie hooks with or without detection

FLBO Series

Bottom luminous opening surface lights

This light type is the basis of ordinary surface light, in which round holes or square holes are opened for forward lighting.

Features

- High-density LEDs are distributed at the bottom of the light source
- Good uniformity, soft and natural light, high brightness
- The size is flexible and changeable, which is convenient for customer customization and has a wide range of applications
- A variety of installation methods are available to facilitate customer installation

Selection instructions

FLBO100100Y50-R

- Lights color: R, G, B, W, etc.
- Round hole diameter, Unit:mm
- Round hole
- Lights luminous area width, Unit : mm
- Lights luminous area length, Unit:mm
- Bottom luminous opening surface lights

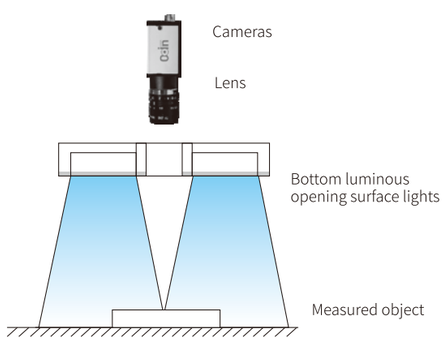

Basic product features

Wavelength/ color temperature	Red	620-630nm	Green	520-530nm
	Blue	465-475nm	White	5000-7000k
Save environment	Temperature	-20-60℃	Humidity	20-85%RH(non-condensing)
Use environment		-0-40℃		
Optional accessories	Lights extension line 3/5 meters optional			
Adapter controller	HDT24-70W-4DT、HDT24-150W-4DT Digital light source controller			

Scope of Adaptation

- Defect detection of metal parts
- Surface pattern detection of porcelain block
- Compressor Surface Defect Detection
- Whether the LED substrate is detected
- Tray Positioning
- Remote control key character recognition
- Outer contour edge location detection
- Tablet Appearance Inspection

Parameter table

No.	Model	Color	Power (W)		Luminous surface size	Dimensions (mm)		
			R	G/B/W		Long	Width	High
1	FLBO100100Y50	●●●○	3.3	4.7	100×100	124	110	20
2	FLBO120120Y50	●●●○	6.2	11	120×120	144	130	20
3	FLBO150100Y50	●●●○	6.9	12	150×100	174	110	20
4	FLBO150150Y50	●●●○	12	16	150×150	174	160	20
5	FLBO200150Y50	●●●○	16	22	200×150	224	160	20
6	FLBO200200Y50	●●●○	21	30	200×200	224	210	20
7	FLBO250200Y50	●●●○	28	47	250×200	264	214	20
8	FLBO250250Y50	●●●○	33	47	250×250	264	264	20
9	FLBO300200Y50	●●●○	32	45	300×200	314	214	20
10	FLBO300250Y50	●●●○	40	57	300×250	314	264	20
11	FLBO300300Y50	●●●○	48	68	300×300	314	314	20
12	FLBO350300Y50	●●●○	53	88	350×300	364	314	20
13	FLBO350350Y50	●●●○	62	88	350×350	364	364	20
14	FLBO400250Y50	●●●○	51	72	400×250	414	264	23
15	FLBO400300Y50	●●●○	61	87	400×300	414	314	23
16	FLBO400350Y50	●●●○	67	96	400×350	414	364	23
17	FLBO400400Y50	●●●○	81	116	400×400	414	414	23
18	FLBO450250Y50	●●●○	57	81	450×250	464	264	23
19	FLBO450350Y50	●●●○	78	114	450×350	464	364	23
20	FLBO500250Y50	●●●○	65	93	500×250	514	264	23
21	FLBO500300Y50	●●●○	76	108	500×300	514	314	23
22	FLBO500350Y50	●●●○	89	127	500×350	514	364	23
23	FLBO500400Y50	●●●○	33	47	500×400	514	414	40
24	FLBO500450Y50	●●●○	37	53	500×450	514	464	40
25	FLBO500500Y50	●●●○	42	60	500×500	514	514	40
26	FLBO600300Y50	●●●○	31	45	600×300	614	314	40
27	FLBO600400Y50	●●●○	42	60	600×400	614	414	40
28	FLBO600600Y50	●●●○	64	90	600×600	614	614	40

No.	Model	Color	Power（W）		Luminous surface size	Dimensions（mm）		
			R	G/B/W		Long	Width	High
29	FLBO700700Y50	●●●○	80	123	700×700	714	714	41
30	FLBO800800Y50	●●●○	117	162	800×800	814	814	41
31	FLBO900500Y50	●●●○	74	123	900×500	914	514	41
32	FLBO900700Y50	●●●○	102	167	900×700	914	714	41
33	FLBO1200600Y50	●●●○	130	216	1200×600	1214	614	41

Product Dimensions（mm）

FLBO100100Y50

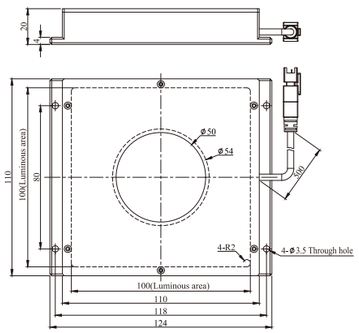

FLBO120120Y50

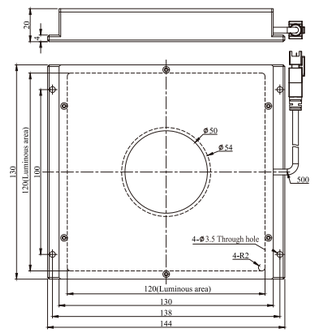

FLBO150100Y50

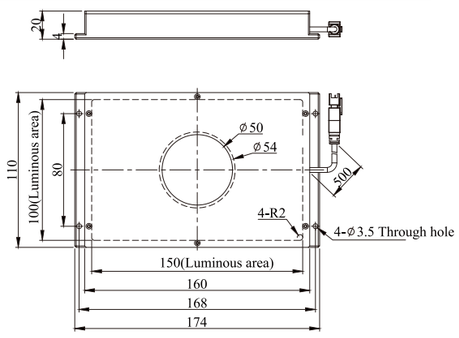

FLBO150150Y50

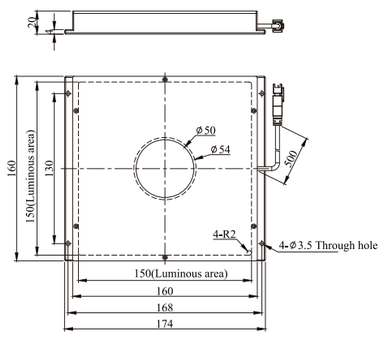

FLBO200150Y50

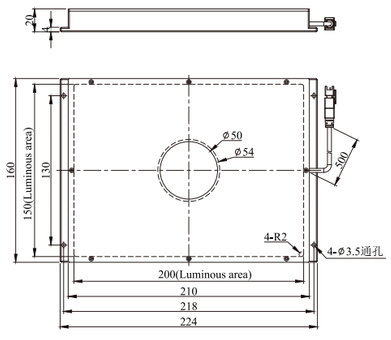

FLBO200200Y50

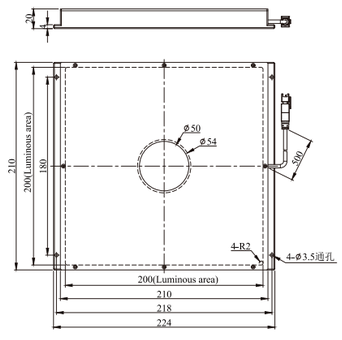

FLBO250200Y50

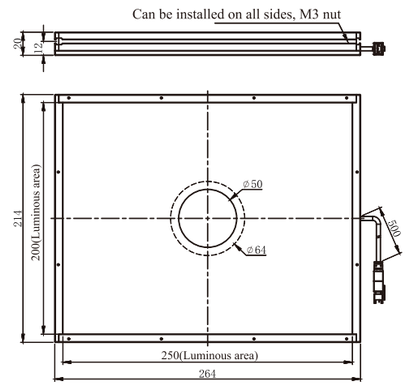

FLBO250250Y50

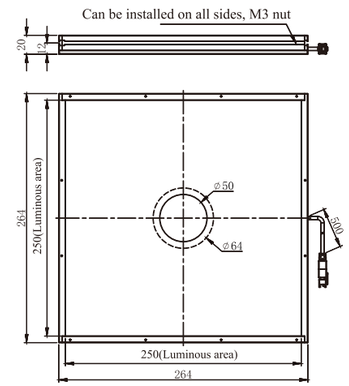

FLBO300200Y50

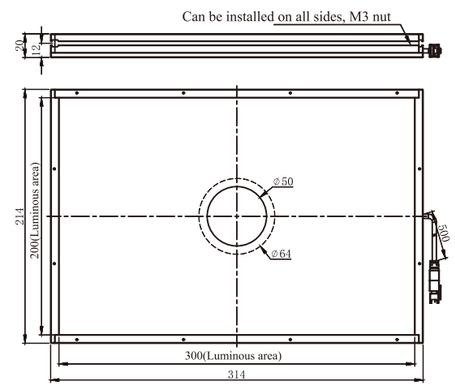

FLBO300250Y50

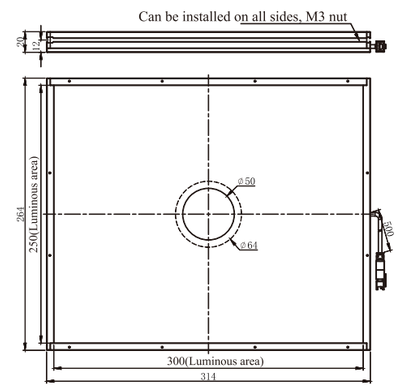

FLBO300300Y50

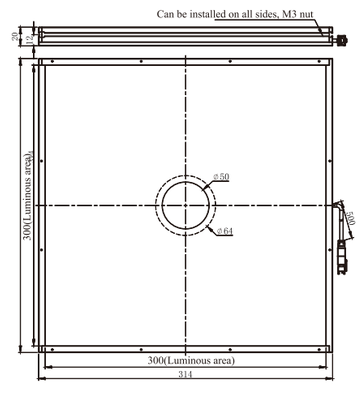

FLBO350300Y50

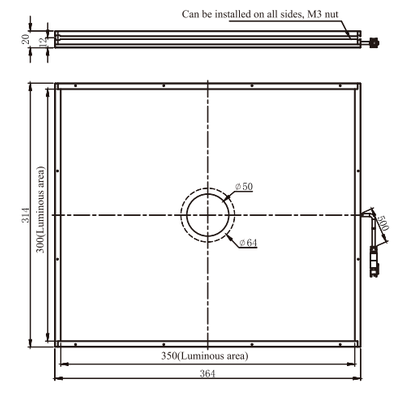

Ring lights P1-11
Bar lights P12-22
Coaxial lights P23-35
Surface lights P36-74
Dome lights P75-77
Shadowless lights P78-88
Point lights P89-90
AOI lights P91-93

FLBO350350Y50

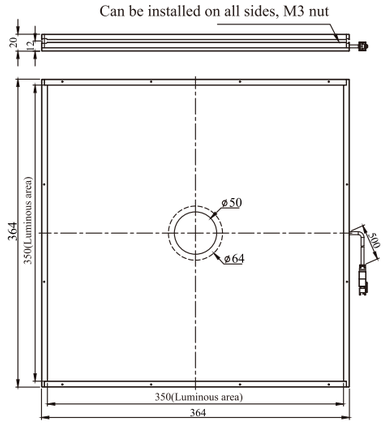

FLBO400250Y50

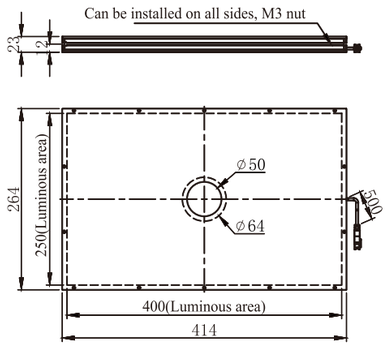

FLBO400300Y50

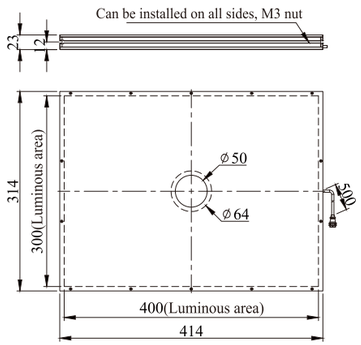

FLBO400350Y50

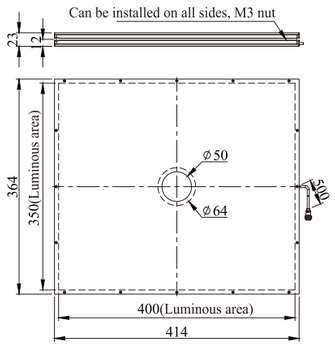

FLBO400400Y50

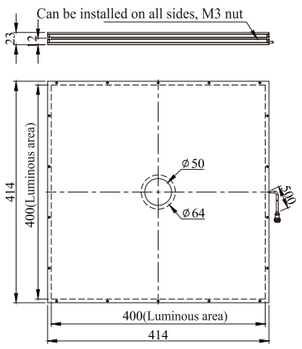

FLBO450250Y50

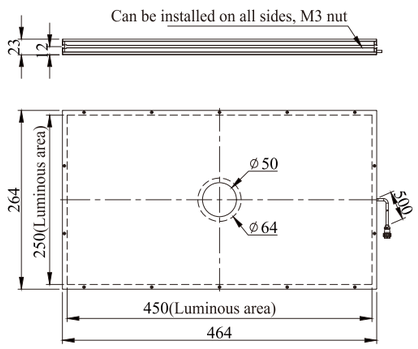

FLBO450350Y50

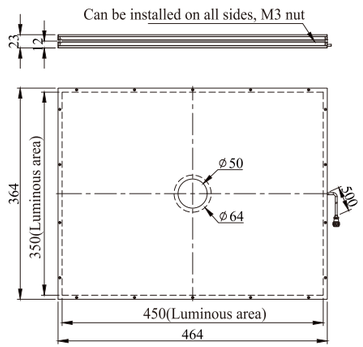

FLBO500250Y50

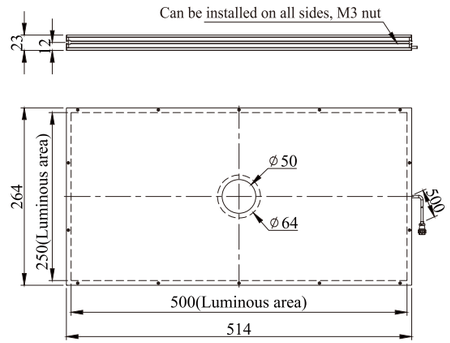

FLBO500300Y50

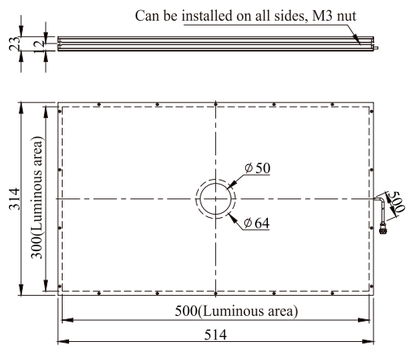

FLBO500350Y50

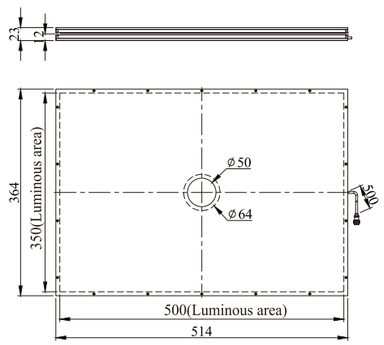

FLBO500400Y50

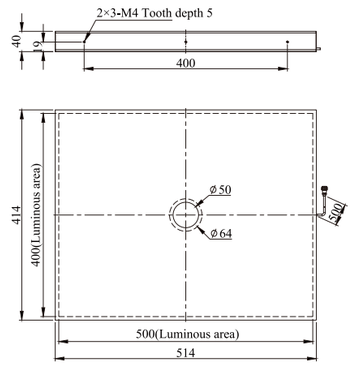

FLBO500450Y50

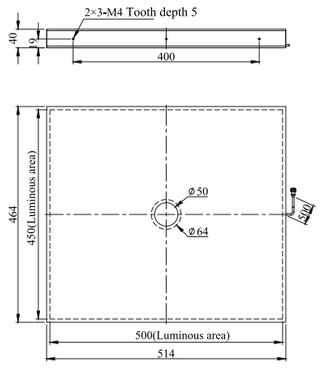

Ring lights P1-11
Bar lights P12-22
Coaxial lights P23-35
Surface lights P36-74
Dome lights P75-77
Shadowless lights P78-88
Point lights P89-90
AOI lights P91-93

FLBO500500Y50

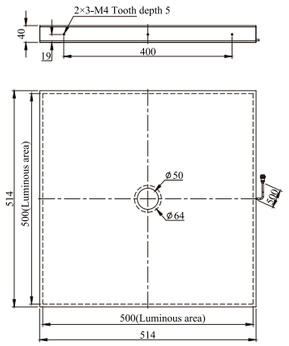

FLBO600300Y50

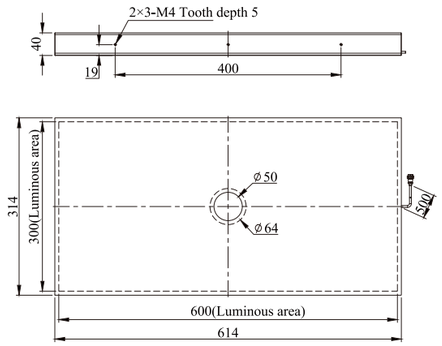

FLBO600400Y50

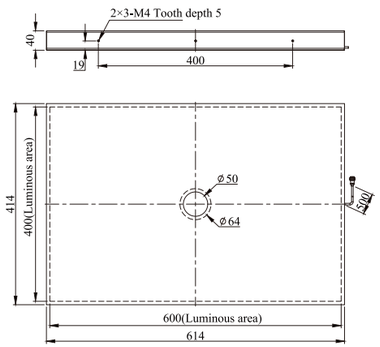

FLBO600600Y50

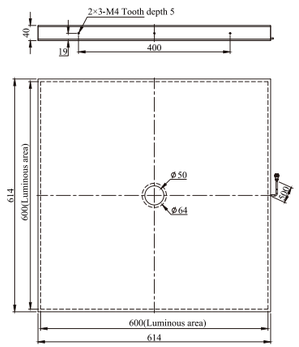

FLBO700700Y50

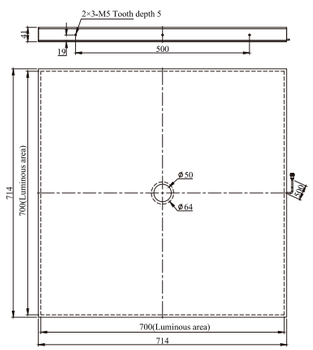

FLBO800800Y50

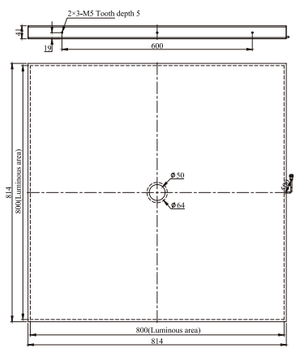

FLBO900500Y50

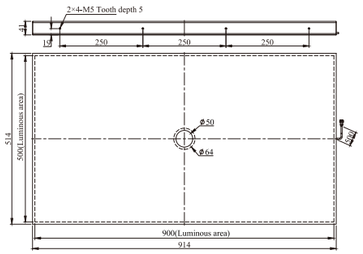

FLBO900700Y50

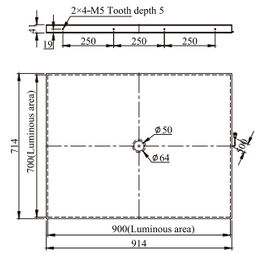

FLBO1200600Y50

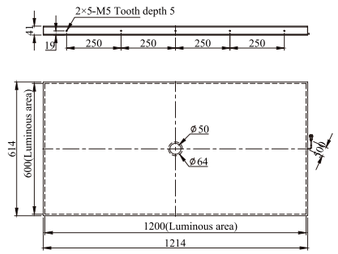

Applications

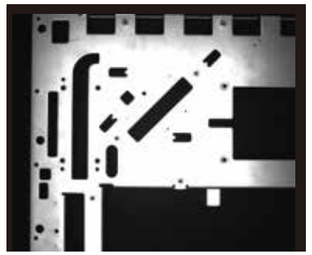

Screw hole detection

Character defect detection

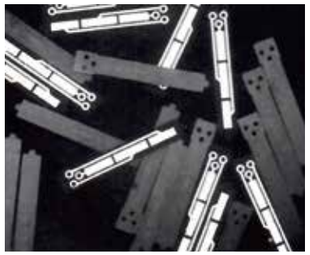

Workpiece forward and reverse differentiation detection

Cell decoding

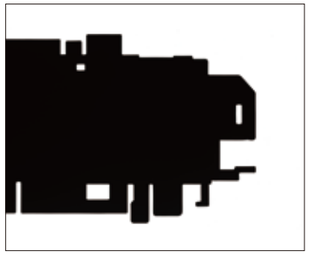

Contour detection

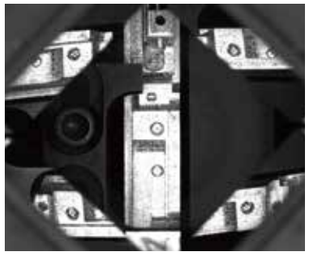

Threaded hole diameter and number of hole turns detection

Ring lights P1-11
Bar lights P12-22
Coaxial lights P23-35
Surface lights P36-74
Dome lights P75-77
Shadowless lights P78-88
Point lights P89-90
AOI lights P91-93

TL Series
Dome lights

The dome lights is designed from a high-density LED spherical surface, with stable performance and convenient installation. The light is emitted evenly at the bottom of the bottom, with special manifestation of light paths to achieve multi-directional lighting. Light diffusion area is large, making it suitable for curved surface, uneven, and curved surface detection.

Features

- Spherical diffuse luminescence
- Suitable for undulating surface and reflective objects
- Unique heat dissipation structure to improve the stability of the machine vision lights
- Compact design to save installation space

Selection instructions

TL116-R

- Lights color: R, G, B, W, etc.
- Maximum diameter of lights profile, unit: mm
- Dome lights

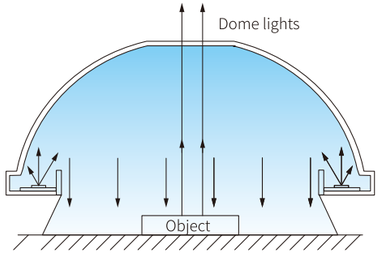

Basic product features

Wavelength/ color temperature	Red	620-630nm	Green	520-530nm
	Blue	465-475nm	White	5000-7000k
Save environment	Temperature	-20-60℃	Humidity	20-85%RH(non-condensing)
Use environment		-0-40℃		
Optional accessories	Lights extension line 3/5 meters optional			
Adapter controller	HDT24-70W-4DT、HDT24-150W-4DT Digital light source controller			

Scope of Adaptation

- Surface defect detection
- Hardware size measurement
- Robotic positioning
- Mark point positioning
- Metal, glass and other reflux object surface detection
- Edge extraction of hardware parts
- Electrical appearance surfacecharacter recognition
- Line color distinction, wheel hub appearance testing

Parameter table

No.	Model	Color	Power (W)		Number of lampbeads	Dimensions(mm)		
			R	G/B/W		Outer diameter	Inner diameter	Height
1	TL116	●●●○	11	16	66	116	25	59.4
2	TL175	●●●○	16	26	116	175	35	83.7
3	TL198	●●●○	21	31	138	198	30	96.5
4	TL260	●●●○	31	41	193	260	48	125.8

Product Dimensions（mm）

TL116

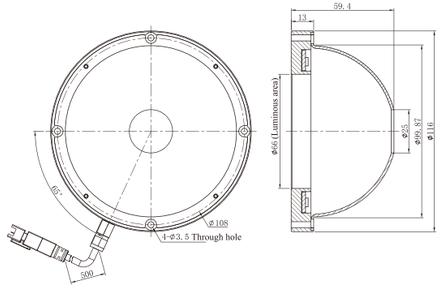

TL175

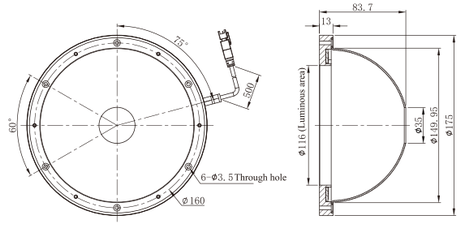

TL198

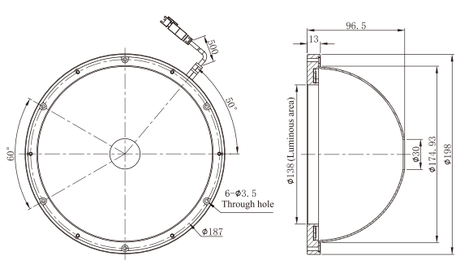

TL260

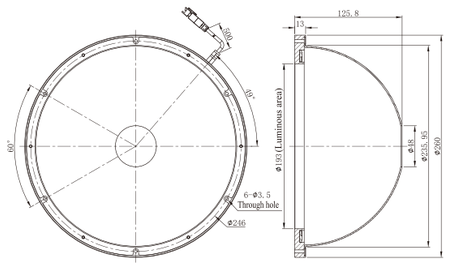

Applications

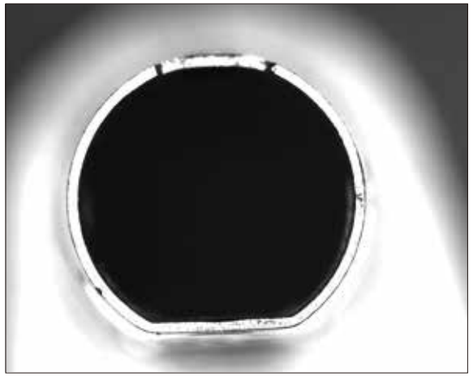

Inspection of cylindrical machined parts

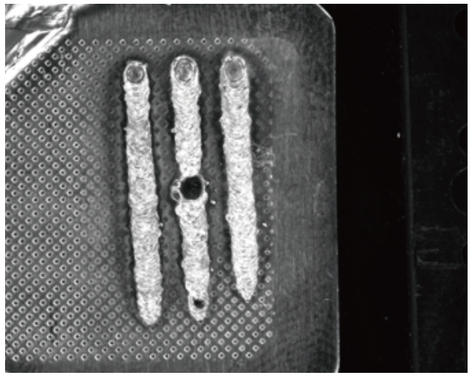

Post-solder burst detection of adapter tabs

Locking screw positioning

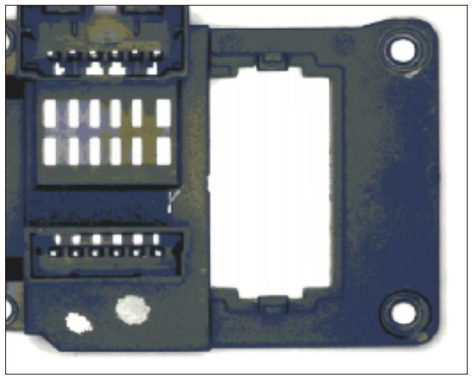

Copper sheet surface reflection detection

CRL Series

Ring shadowless lights

In this type of light, a special diffuse plate is used, and there is no interference from lamp beads. It can be used at high and low working distances. The luminous angle is wide, with very high uniformity.

Features

- Large irradiation area
- Both high and low working distances can be used
- Unique heat dissipation structure to improve light source stability
- High illumination brightness

Selection instructions

CRL116-R

- Lights color: R, G, B, W, etc.
- Outer diameter unit: mm
- Ring shadowless lights

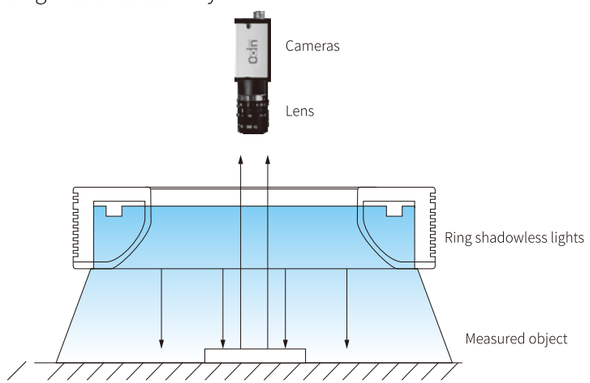

Basic product features

Wavelength/ color temperature	Red	620-630nm	Green	520-530nm
	Blue	465-475nm	White	5000-7000k
Save environment	Temperature	-20-60℃	Humidity	20-85%RH(non-condensing)
Use environment		-0-40℃		
Optional accessories	Lights extension line 3/5 meters optional			
Adapter controller	HDT24-70W-4DT、 HDT24-150W-4DT Digital light source controller			

Scope of Adaptation

- High-speed assembly line electronic surface inspection
- Aluminum foil packaging inspection of medical drugs
- Uniform illumination at high angles
- Detection of dirt on the surface of curved beverage bottle caps
- Character detection of high reflective metal mobile phone case panel
- Screen printing inspection of highly reflective IC plastic package

Parameter table

No.	Model	Color	Power (W)		Dimensions(mm)		
			R	G/B/W	Outer diameter	Inner diameter	Height
1	CRL116	●●●○	11	16	116	66	25.5
2	CRL150	●●●○	16	26	150	106	26
3	CRL166	●●●○	16	26	166	116	25.5
4	CRL196	●●●○	21	31	196	146	25.5

Product Dimensions (mm)

CRL116

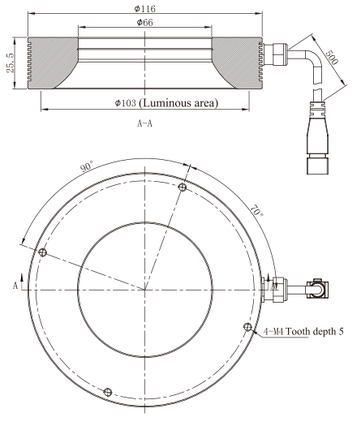

CRL150

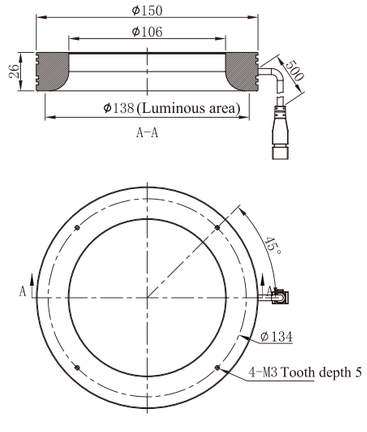

CRL166

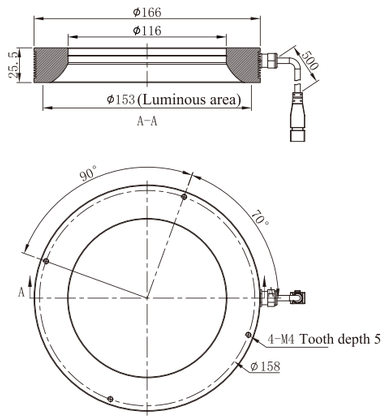

CRL196

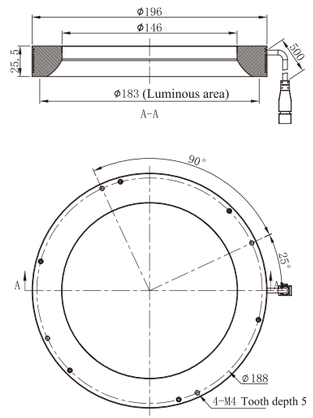

Applications

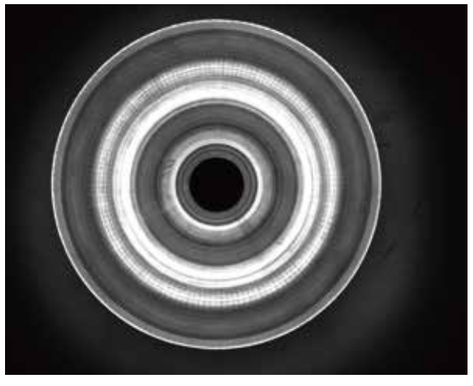

Missile dimensional inspection

Razor Inspection

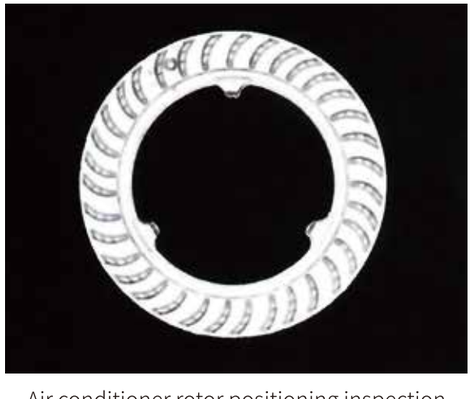

Air conditioner rotor positioning inspection

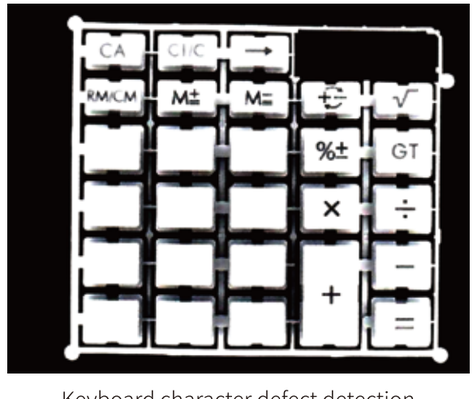

Keyboard character defect detection

FNSL Series

Planar shadowless lights

This type of light offers diffuse light from the flat luminous surface, with advantages of simple and compact structure, easy to install, high uniformity and high angle light effect.

Features

- High -density LED display, high brightness
- Compact structure design, saving installation space
- Optional diffuser plate, so that the light diffuses evenly
- Unique heat dissipation structure, improve the stability of light sources
- Ring-shaped light illuminates 360 degrees to highlight the three-dimensional information of the product

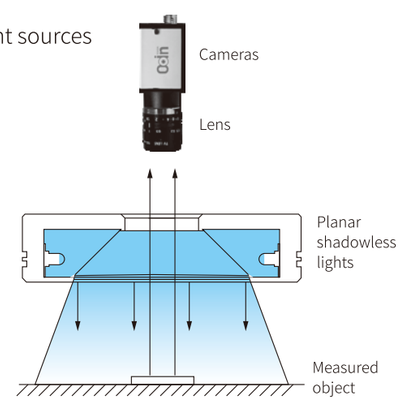

Selection instructions

FNSL60-R

- Lights color: R, G, B, W, etc.
- Maximum diameter of lights profile,Unit : mm
- Planar shadowless lights

Basic product features

Wavelength/ color temperature	Red	620-630nm	Green	520-530nm
	Blue	465-475nm	White	5000-7000k
Save environment	Temperature	-20-60°C	Humidity	20-85%RH(non-condensing)
Use environment		-0-40°C		
Optional accessories	Lights extension line 3/5 meters optional			
Adapter controller	HDT24-70W-4DT、HDT24-150W-4DT Digital light source controller			

Scope of Adaptation

- Hardware size measurement
- Robotic positioning
- Surface defect detection
- MARK point positioning
- PCB substrate detection
- Coding character recognition
- Unexplained surface characters
- Injury and dirt detection
- Microscopic lighting
- Wafer body test
- Electrical shell, part detection
- Fabric graphic inspection

Parameter table

No.	Model	Color	Power (W)		Dimensions(mm)		
			R	G/B/W	Outer diameter	Inner diameter	Height
1	FNSL60	●●●○	1.3	2.2	60	18	15
2	FNSL74	●●●○	1.8	2.6	74	20	18
3	FNSL116	●●●○	2.6	4.3	116	44	17
4	FNSL160	●●●○	4.3	6.5	160	44	19.5

Product Dimensions（mm）

FNSL60

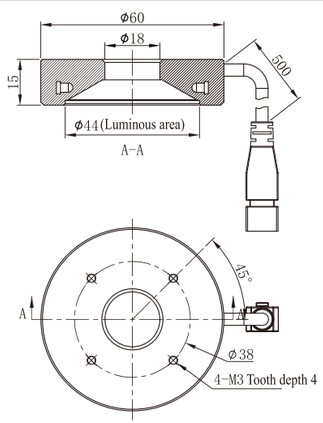

FNSL74

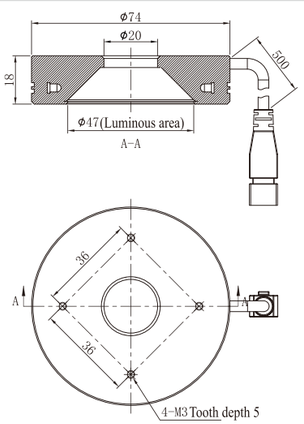

Ring lights P1-11
Bar lights P12-22
Coaxial lights P23-35
Surface lights P36-74
Dome lights P75-77
Shadowless lights P78-88
Point lights P89-90
AOI lights P91-93

FNSL116

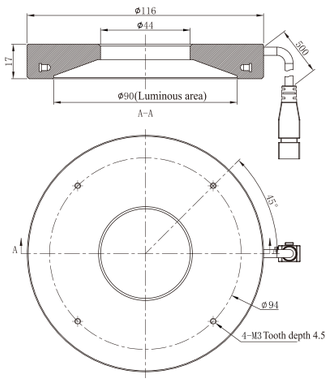

FNSL160

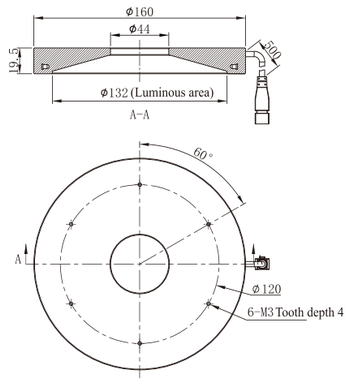

Applications

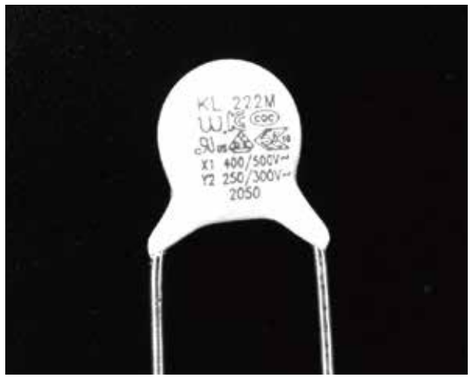

Electrofusion character detection

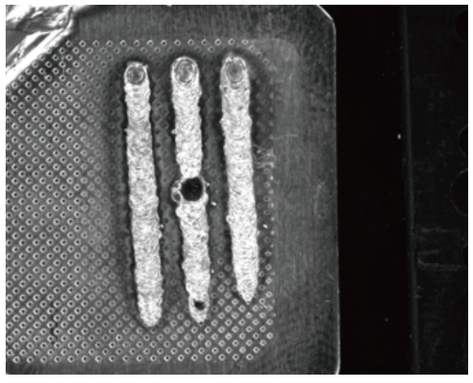

Post-solder burst detection of adapter tabs

Plastic shell screen printing offset

Drill end face inspection

QNL Series

Square shadowless lights

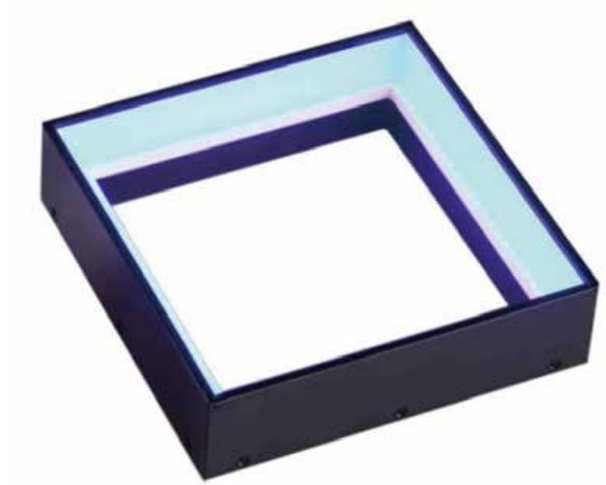

This type of light offers low-angle diffuse light that is irradiated from four directions, using special diffuse materials, and special structural design for soft light and high uniformity. It does not have interference from lamp beads, or dark areas at the corner connections.

Features

- Suitable for square objects
- Uniform luminescence
- Eliminates reflections

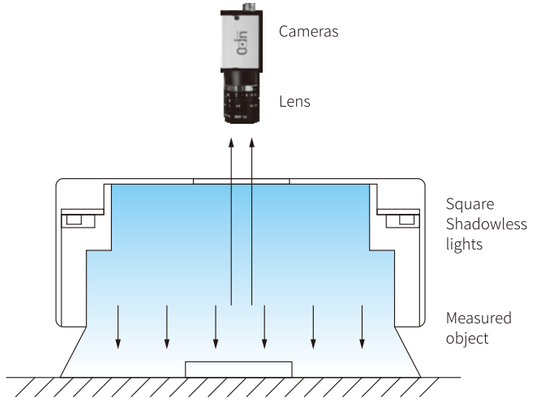

Selection instructions

QNL48-R

- Lights color: R, G, B, W, etc.
- Lights form factor, Unit : mm
- Square shadowless lights

Basic product features

Wavelength/ color temperature	Red	620-630nm	Green	520-530nm
	Blue	465-475nm	White	5000-7000k
Save environment	Temperature	-20-60°C	Humidity	20-85%RH(non-condensing)
Use environment		-0-40°C		
Optional accessories	Lights extension line 3/5 meters optional			
Adapter controller	HDT24-70W-4DT、HDT24-150W-4DT Digital light source controller			

Scope of Adaptation

- Hardware size measurement
- Robot positioning
- Surface defect detection
- MARK point positioning
- PCB substrate inspection
- Substrate appearance pattern detection
- High-angle uniform irradiation
- Defect and Dirt Detection
- Microscope illumination
- Wafer body detection
- FPC product positioning
- Pin bending detection

Parameter table

No.	Model	Color	Power (W)		Dimensions(mm)		
			R	G/B/W	Outer diameter	Inner diameter	Height
1	QNL48	●●●○	1.6	2.6	48	48	30
2	QNL75	●●●○	2.1	3.8	75	75	30
3	QNL96	●●●○	3.1	5.1	96	96	30
4	QNL120	●●●○	4.1	6.3	120	120	30

Product Dimensions (mm)

QNL48

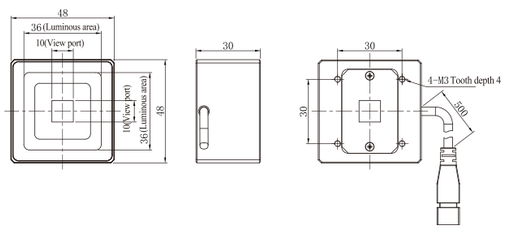

QNL75

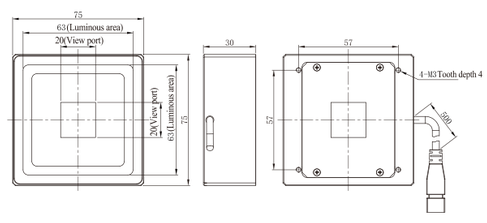

QNL96

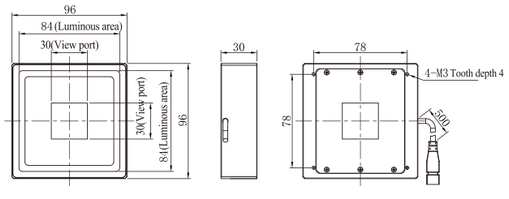

QNL120

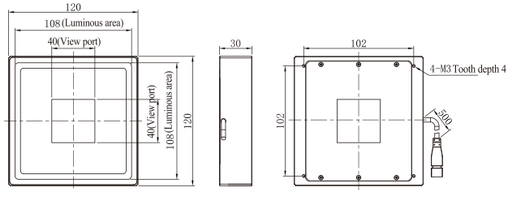

Applications

Linear angle measurement

Bar code identification

PCB character and color inspection

TNL Series

Round shadowless lights

This type of light provides low angle illumination. It is great for round objects measurement. It uses special diffusing material with high uniformity, and no lamp bead interference.

Features

- Use for Ring targets with larger formats and different regular targets with smaller formats
- For ordinary ring light sources, it can achieve high uniform lighting
- Can achieve ring-shaped shadowless irradiation effect

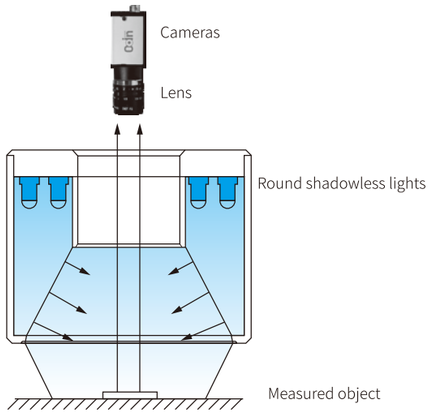

Selection instructions

TNL100-R

- Lights color: R, G, B, W, etc.
- Lights profile diameter, Unit : mm
- Round shadowless lights

Basic product features

Wavelength/ color temperature	Red	620-630nm	Green	520-530nm
	Blue	465-475nm	White	5000-7000k
Save environment	Temperature	-20-60°C	Humidity	20-85%RH(non-condensing)
Use environment		-0-40°C		
Optional accessories	Lights extension line 3/5 meters optional			
Adapter controller	HDT24-70W-4DT、HDT24-150W-4DT Digital light source controller			

Scope of Adaptation

- Pin bending detection
- Various character recognition
- Inspection of parts on the substrate
- Uniform irradiation at low angle
- Detection of dirt on the surface of the pin
- Label detection, foreign body detection on the epistar
- FPC product positioning
- Contour extraction of round metal parts

Parameter table

No.	Model	Color	Power (W)		Light-emitting surface size	Dimensions(mm)		
			R	G/B/W		Outer diameter	Inner diameter	Height
1	TNL50	●●●○	2.6	3.5	42	50	21	40
2	TNL100	●●●○	5.2	7.8	92	100	71	40
3	TNL180	●●●○	9	15	172	180	151	40

Product Dimensions (mm)

TNL50

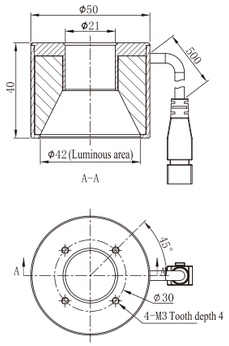

TNL100

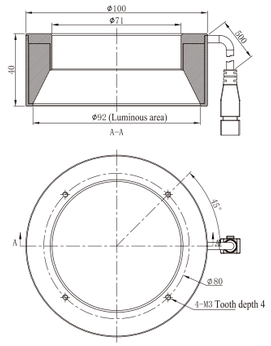

TNL180

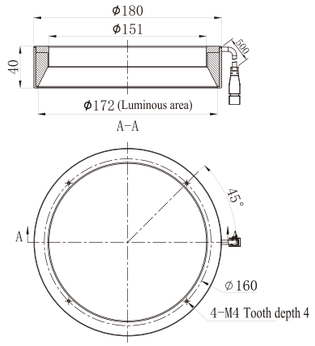

Applications

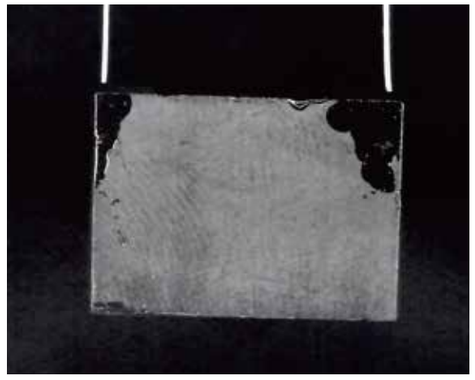

Capacitive plane resin inspection

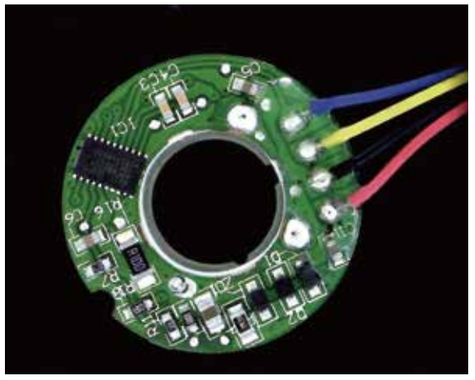

Testing concentricity testing

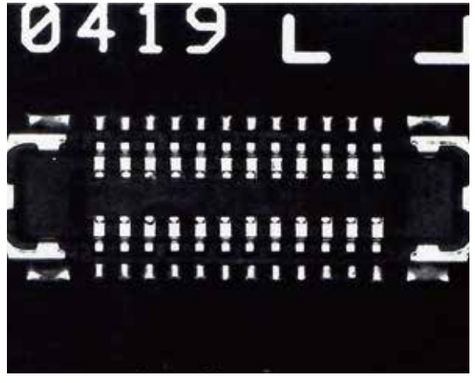

Connector positioning

Motor PCB solder joint and line color inspection

PL Series
Point lights

The LED point light source has the advantages of high luminous intensity, small luminous area, compact design, and small installation space.

Features

- Concentrated brightness with small light-emitting area
- Compact, efficient heat dissipation, low power consumption and long service life
- Compatible with mainstream telecentric lenses on the market, the coaxial lighting of the lens, and non-standard sizes can be customized

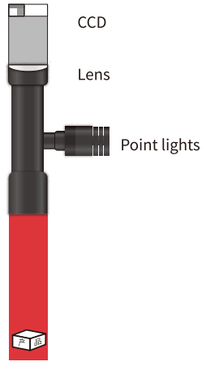

Selection instructions

PL08-1-R

- Lights color: R, G, B, W, etc.
- Lights power, unit: W
- Lights housing front diameter,Unit : mm
- Point lights

Basic product features

Wavelength/ color temperature	Red	620-630nm	Green	520-530nm
	Blue	465-475nm	White	5000-7000k
Save environment	Temperature	-20-60°C	Humidity	20-85%RH(non-condensing)
Use environment		-0-40°C		
Optional accessories	Lights extension line 3/5 meters optional			
Adapter controller	HDT24-70W-4DT、HDT24-150W-4DT Digital light source controller			

Scope of Adaptation

- Mark point positioning
- Used in high-speed detection occasions
- Filter surface defect detection
- Special light source for coaxial lens
- Wafer Positioning and Defect Inspection
- Detection of defects on the surface of flat objects
- Distinguishing and positioning detection of different materials
- Edge positioning detection of products with height difference

Parameter table

No.	Model	Color	Power (W)		Dimensions(mm)		
			R	G/B/W	Outer diameter	Inner diameter	Height
1	PL08-1	●●●○	0.9	1.3	24	8	50
2	PL08-3	●●●○	1.8	2.5	24	8	59

Product Dimensions (mm)

PL08-1

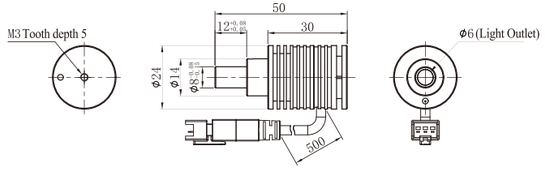

PL08-3

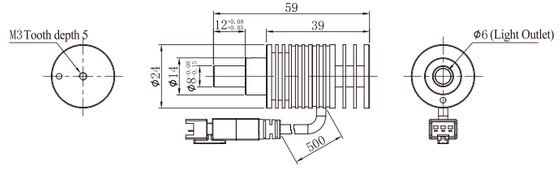

Applications

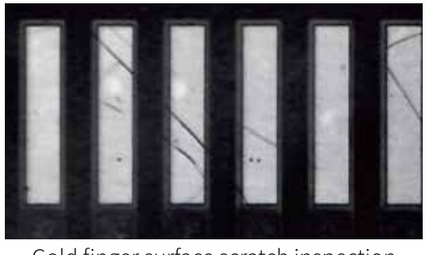

Gold finger surface scratch inspection

Gold finger surface scratch inspection

AOIL Series

AOI lights

This type of the light provide multi-color and multi-angle lighting with high brightness and fast detection speed. It is useful for three-dimensional information extraction. Each color can be independently controlled.

Features

- Multi-color and multi-angle lighting that can accurately reflect the slope information of the surface of the object. It is dedicated to AOI and is mostly used for ring defect detection.
- Each color can be controlled independently.
- Can be customized according to specific requirements.

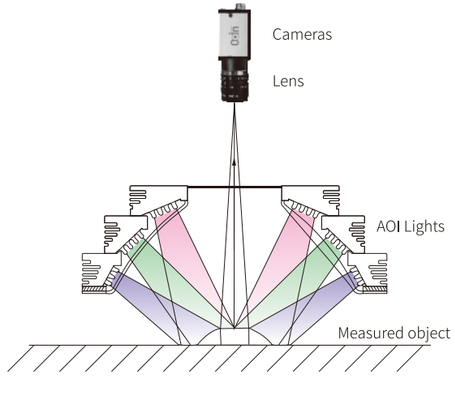

Selection instructions

AOIL13045-R

- R — Lights color: R, G, B, W, etc.
- 45 — Lights inner diameter, Unit : mm
- 130 — Lights outer diameter, Unit : mm
- AOIL — AOI lights

Basic product features

Wavelength/ color temperature	Red	620-630nm	Green	520-530nm
	Blue	465-475nm	White	5000-7000k
Save environment	Temperature	-20-60℃	Humidity	20-85%RH(non-condensing)
Use environment		-0-40℃		
Optional accessories	Lights extension line 3/5 meters optional			
Adapter controller	HDT24-70W-4DT、HDT24-150W-4DT Digital light source controller			

Scope of Adaptation

- Welding quality inspection of electronic components, including screen printing characters, presence or absence of components, virtual welding, leakage welding, continuous welding, welding bias, etc.
- Detection of fine scratches and pits on the surface of highly reflective objects
- Surface defect detection of rubber ring products
- The surface of the filter is scratched and dirty

Parameter table

No.	Model	Color	Power (W)		Dimensions(mm)		
			R	G/B/W	Outer diameter	Inner diameter	Height
1	AOIL9520	○		11	95	20	40
2	AOIL11850-DS	●●●	17		118	50	41
3	AOIL13045	○		22	130	45	58
4	AOIL20365-DS	●●●	63		203	65	61

Product Dimensions (mm)

AOIL9520

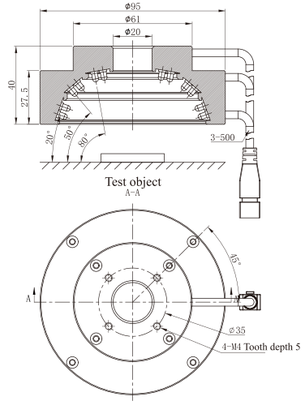

AOIL11850-DS

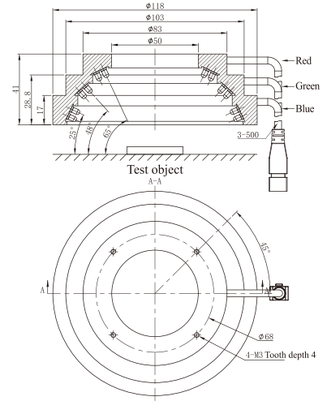

AOIL13045

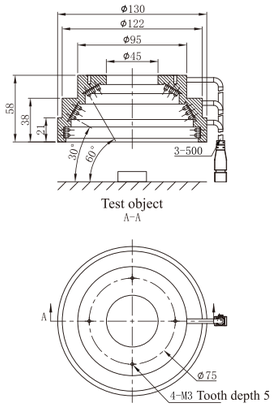

AOIL20365-DS

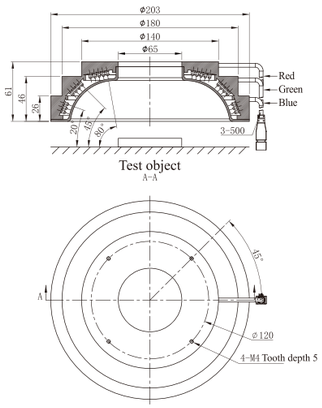

Applications

Automotive industry rubber column classification testing

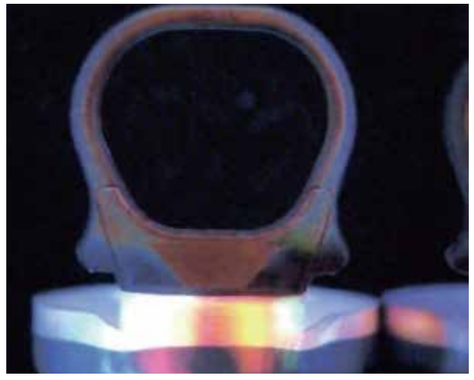

Pull ring defect detection

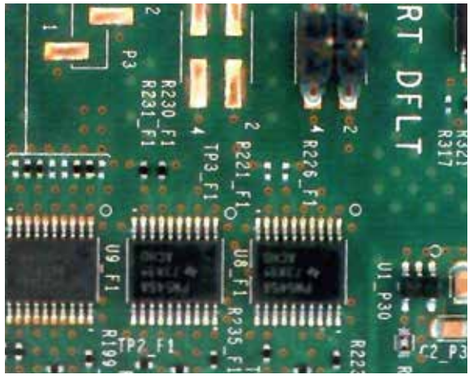

Circuit board solder joint inspection

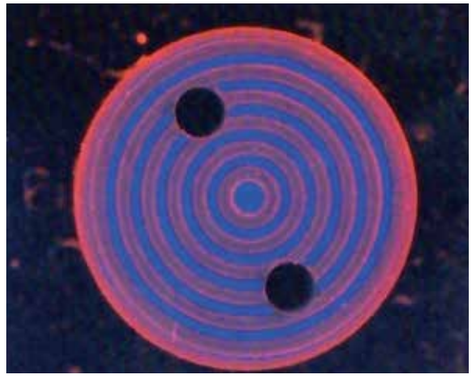

Rubber appearance defect detection